Otane to Waipawa Wastewater Rising Main

Design Report

Prepared for Central Hawkes Bay District Council
Prepared by Beca Limited

24 Aug 2020

Creative people together transforming our world

Contents

Appendices

Revision History

Revision Nº	Prepared By	Description	Date
A	Alex Leo/Leighton Beard	MCA - Draft for Client Review and Comments	12 July 2019
B	Alex Leo/Anamika Nampoothiry	Completion of detailed design	24 August 2020

Document Acceptance

Action	Name	Signed	Date
Prepared by	Anamika Nampoothiry		24 August 2020
Reviewed by	Alex Leo		24 August 2020
Approved by	Rachael Shaw		24 August 2020
on behalf of	Beca Limited		

Executive Summary

Central Hawkes Bay District Council (CHBDC) has engaged Beca Ltd (Beca) to undertake design services for a new wastewater rising main, approximately 9km in length, from the Otane Wastewater Pond to the Waipawa Wastewater Treatment Plant (WWTP). As part of the design Beca were also required to consider:

- The financial incentive and programme requirements of combining the construction with a new watermain project that shared 3km of the proposed rising main's route.
- The restrictions and demands of the future CHBDC wastewater strategy, currently in an early optioneering design stage.
- Requirements for intermediate pump stations and route options.

Several potential routes and pumping options were identified by CHBDC and Beca and analysed via a multiple criteria analysis (MCA) and a net present value (NPV) assessment. The final MCA and pumping arrangement considerations supported the selection a single progressive cavity pump station at Otane delivering to a PE100 DN200 PN25 rising main route that utilises the Tiffen Lane paper road.

CHBDC's proposed second potable water supply pipeline to Otane shares approximately 3.2 km of the Otane wastewater rising main preferred route. To allow the wastewater rising main to be constructed as a variation to the watermain contract, the design of the Otane wastewater rising main was split into stages.

- Stage 1: Lawrence Street (Otane) to the railway line crossing at Racecourse Road. This stage is shared by the watermain project.
- Stage 2: Railway line crossing at Racecourse Road to 20m into the Waipawa WWTP.
- Stage 3: Connection of Stage 1 and 2 to the Waipawa WWTP inlet works and Otane pumping station.

Stage 1 will be constructed in 2020 alongside the watermain project. The construction of Stage 2 will be done separately, depending on CHBDC wastewater strategy. Detailed design of Stage 3 will occur alongside the design of the new Otane pump station and the Waipawa WWTP upgrade works.

A Safety in Design Register has been produced and discussed with CHBDC. A detailed SiD Risk Register that outlines the key risks identified, and their proposed mitigation measures is attached as an Appendix.

The Class 2 (-10% to +15%) Engineers Estimate, including contingency, for Stage 1 and Stage 2 is $1,840,000 and $ 1,595,000 (ex GST) respectively.

1 Introduction

1.1 Background

Central Hawkes Bay District Council (CHBDC) has engaged Beca Ltd (Beca) to undertake wastewater rising main design services for the Otane to Waipawa rising main. The project involves the installation of a new rising main, approximately 9km in length, from the Otane Wastewater Pond to the Waipawa Wastewater Treatment Plant (WWTP).

CHBDC are also installing a new watermain from Waipawa to Otane as part of a separate project. The new watermain is expected to share approximately 3km of its route with the proposed rising main. Due to this there is a financial opportunity to install both the watermain and the rising main simultaneously. Consequently, CHBDC asked Beca to fast-track the shared section of the rising main design from concept stage to detail design to endeavour to align the rising main construction programme with the 3km shared with the watermain project. This has led to the design work being split into three stages, further information on this can be viewed in Section 6.

1.2 Existing Site

1.2.1 Otane Wastewater Treatment Plant (WWTP)

The Otane WWTP is located to the northeast of the Otane township. Gravity sewage enters the pond from the west via an above ground pipe and enters via two chambers on the pond's southern side. The pond outlet is located on the eastern side passing, through a now redundant flow monitoring manhole and into a recently constructed v-notch weir flow channel. In October 2018 a new inlet flow meter was installed on the incoming above ground sewer. At the time of the site visit, described below, this meter was under repair.

Figure 1: Otane Pond Layout

Beca and CHBDC conducted a site visit on the 4 June 2019. This visit highlighted several points to be considered during the design of the wastewater rising main. These were:

- CHBDC have approached the landowner of the field to the east about land acquisition. This field could potentially be used should the wastewater pump station require additional land.
- The current discharge consent of the Otane WWTP will expire in 2021.
- The v-notch channel overtops and discharges to land during large storm events. Due to this flow, readings during storm events are likely to be unreliable.
- The discharge pipe after the v-notch weir channel currently has a restriction on its flow, possibly due to a broken pipe downstream. It is possible this is contributing to the overtopping discussed in the previous point.

1.2.2 Waipawa Wastewater Treatment Plant

The Waipawa WWTP is located to the east of the Waipawa township off Pourerere Road. The local GIS shows that currently the plant serves town via a rising main and a gravity sewer entering on the eastern side of the site. The site outlet discharges to a stream on the western side. CHBDC owns all the land between the WWTP pond and Pourerere Road. Half of this is currently used as a geo-bagging area.

Figure 2: Waipawa WWTP

It was noted on site that:

- A deep drainage ditch with a stream runs between the WWTP and Pourerere Road. This ditch is reported to run close to full during storm events.
- There is an existing pump station on the Western side of the site, currently lifting the gravity sewer into the WWTP.
- CHBDC expect to use the owned field to the north east to build the future treatment improvements planned at the site.

1.2.3 Rising main Route

The Otane rising main is required to run from the Otane WWTP and discharge at the Waipawa WWTP. The route will require passing via the edge of the Otane township and across both local rural roads and private land. CHBDC and Beca drove the expected rising main routes during the site visit and noted that the roads appeared to have low traffic volumes with some lengths containing wide berms beside the road.

Further details and plans of the routes proposed are discussed in Section 3.

2 Design Basis

2.1 Design Objectives

CHBDC requires the design of a wastewater rising main from the Otane pond to the Waipawa WWTP. Beca are required to consider the financial incentive and programme requirements of combining the construction with the watermain project. The project will also need to consider restrictions and demands of the future CHBDC wastewater strategy, currently in an early optioneering design stage.

The design objectives can be split into several distinct sections:

Wastewater Strategy Objectives:

- Allow for a pump station/s and rising main design capable of conveying both pond effluent and raw sewerage. It is expected that the Otane pond will be decommissioned in the future requiring raw sewage to be transported to Waipawa.
- Locate the Otane pump station at a depth and position suitable for operation both with and without the pond.
- Allow for the discharge point at the Waipawa WWTP to be taken to the current WWTP discharge outlet.

Rising Main Design Objectives:

- Assess design flow to be delivered from Otane.
- Assess an intermediate pump station location and concept layout, if required.
- Assess a preferred route via a multiple criteria analysis selection.
- Assess pumps for both pump stations.
- Assess pipe size and material for the new rising main.

Rising Main Constructability Objectives:

- Assess the length of the wastewater rising main to share a trench with the watermain project.
- Supply pipe materials and grade as early as feasible to allow the construction contractor to place material orders.

2.2 Input Flow Data

Flow records for the Otane WWTP were supplied by CHBDC. These records included:

- Daily pond discharge flows for a number of years.
- Instantaneous pond inflows at hourly intervals since 3 October 2018.

2.2.1 Minimum Sustained Dry Weather Flow

Residence times within the rising main will be in the order of days and the resulting septicity of the sewage is a significant issue.

The minimum sustained dry weather flow will impact on this.

Analysis of 2018 daily pond discharge records provides:

- A minimum daily pond outflow of 49.2m^3/d (0.57L/s), equating to 79L/cap.d.
- A minimum weekly pond outflow of 58.4m^3/d (0.68L/s), equating to 94L/cap.d.
- A minimum monthly pond outflow of 73.0m^3/d (0.85L/s), equating to 118L/cap.d.

Pond inflows may have been higher due to evapo-transpiration within the pond.

2.2.2 Minimum flows may increase once the new watermain becomes operational Average Dry Weather Flow (ADWF)

Analysis of daily flow records provides an average ADWF for 2018 of 90.3m^3/d (1.20L/s), where ADWF is defined as the average flow on days which have had no rainfall either on the day or on the seven preceding days. This equates to a per capita flowrate of 146L/cap.d. Pond inflows may be higher due to evapo-transpiration within the pond.

Design ADWF can also be estimated from population. The following sources gives domestic ADWFs of:

- NZS4404 – 180 to 250L/cap.d.
- Hastings District Council Engineering Code of Practice 2011 - 250L/cap.d.

Table 1 below outlines the ADWF assuming 250L/cap.d.

Table 1: 2018 ADWF Based on Population

Parameter	Units	2018	2048[1]	
Wastewater Connections		252	-	CHBDC Long Term Plan 2018-28
Household Residency		2.46	-	CHBDC Long Term Plan 2018-28
Contributing population		620	744	
Per capita flow	L/cap.d	250	250	
ADWF	L/s	1.79	2.15	

1. Assuming a 20% population increase in population to 2048 as per the CHBDC Long Term Plan 2018-28 Supporting Information, 1. Infrastructure Strategy

A future design ADWF of 2.15L/s is adopted based on 250L/cap.d on the basis that per capita contributions may increase once the new watermain becomes operational. However, it is noted that future ADWF could be as low as 1.4L/s if per capita contribution does not increase.

2.2.3 Wet Weather Flows

The daily pond discharge flows are calculated from ultrasonic level measurements of the water level upstream of a v-notch weir. It is understood that the v-notch weir submerges during peak wet weather events and flow overtops the weir channel. Thus, while the measurements are useful for confirming dry weather flows they will be inaccurate for Peak Wet Weather Flows (PWWF).

They do however indicate that peak wet weather flow events in Otane can last as long as four days.

Pond inflows are measured by a magflow meter installed in the incoming gravity pipe. This has been installed in an inverted siphon in order to keep the meter flowing full under all conditions. There is a risk that solids could be settling in the inverted siphon and affecting the flow measurements.

Pond inflows as high as 49L/s have been recorded, which equates to a wet weather peaking factor (Instantaneous PWWF/ADWF) of about 40 on the 2018 ADWF. However, the flow records do not yet include a peak wet weather event.

It is understood from discussions with CHBDC Operations that overflows from the sewerage network may be occurring during peak wet weather events. These would add to the total wet weather flow for Otane.

It is noted that:

- There is insufficient data to confirm peak wet weather flows and their duration.
- It appears that wet weather flows may be extremely high and of extended duration.
- An infiltration and inflow reduction programme is currently being investigated but no recommendations have yet been made regarding wet weather flow targets.

- If the resulting wet weather flow exceeds the pump capacity, storage at Otane and/or consented overflows would be required.

As a result of the above points it is not feasible to select a PWWF from the available data. Furthermore, the tight programme requirements also prevent CHBDC from delaying the rising main design till reliable wet weather flows become available. A risk workshop held with CHBDC on 1 July 2019 discussed mitigations for the risks of designing the rising main without reliable flow data. These can be summarised to two key risks:

Actual PWWF exceeds design expectations:

Mitigated by CHBDC implementing a I&I programme to control peak events. If this is not sufficient, options for future storage at Otane are feasible via the reuse of the pond or its surrounding area.

A conservative pump flow rate leads to future costs upgrading the WWTP:

Mitigated by Beca investigating lower flow rate options by adjusting both route (Section 3) and pump arrangements (Section 4). Control of this risk was used as driver for the design basis going forward.

CHBDC accepted that mitigations described above are suitable in the place of reliable flow data. As a result, the final design flow was selected based on route and pump requirements as detailed in Section 4.

It should be noted that the following above risk are discussed further in the CHBDC Waipawa and Waipukurau WWTP Upgrade Scheme Concept Design, 24 July 2020, and seeks to clarify the expected peak flows for the catchments.

3 Rising Main Route Selection

3.1 Route Option Identification

During the site visit several potential routes were identified by CHBDC and Beca. These routes were analysed via a multiple criteria analysis. A sketch of the routes is shown below in Figure 3.

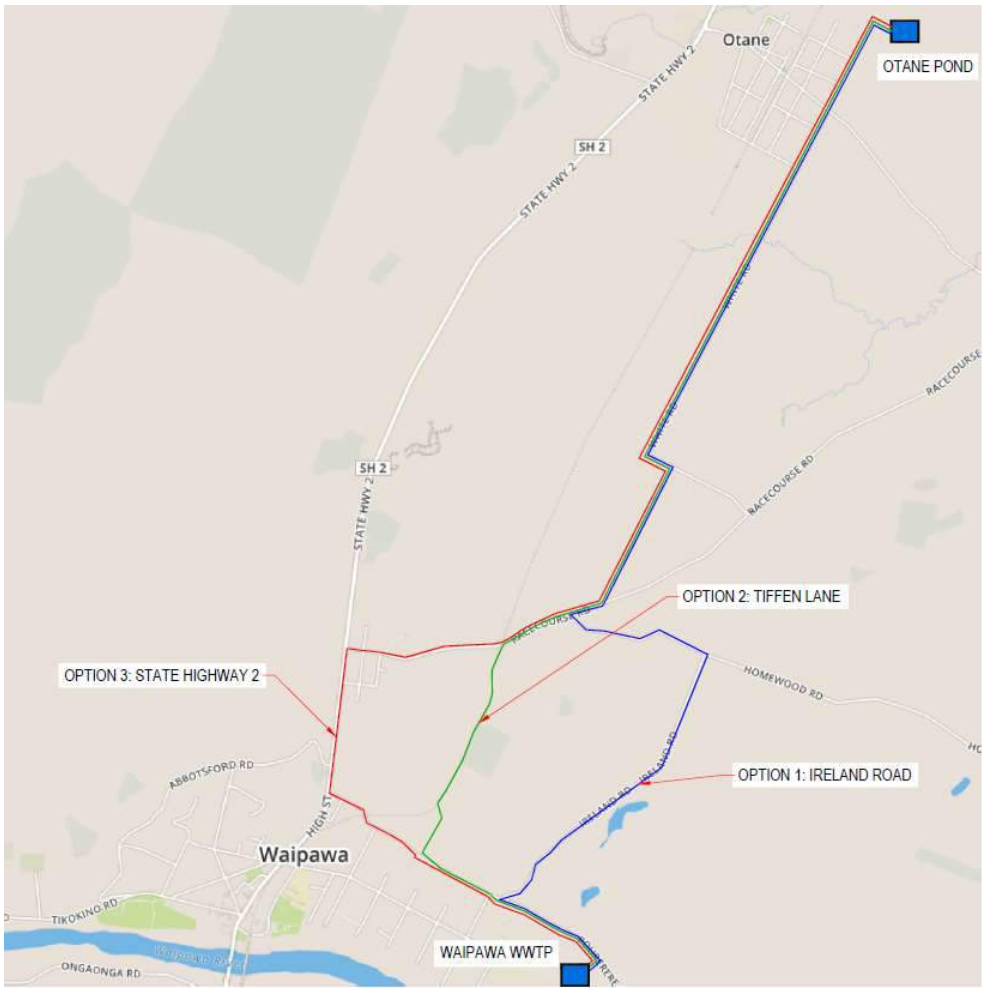

Figure 3: Propose Rising Main Route Options

Each proposed route option is expected to require an intermediate pumping station and acquisition of private land to the north of the Waipawa WWTP to facilitate the building of a rising main discharge standpipe.

All proposed routes share the same alignment from the Otane pond to the Racecourse and Homewood Road junction. After the junction there are possible variations for the rising main path. These can go via Ireland Road, Tiffen Lane or State Highway 2 (SH2).

3.1.1 Route 1: Ireland Road

The 9.7km Ireland Road route allows requires no acquisition of private land outside of the land for the WWTP standpipe. However, the route passes over a 160m high point that will require the stand pipe to be an estimated 20-25m higher than the ground level at the WWTP. The length and static head of the pipe will also require higher pumping rates than the Tiffen Lane option.

3.1.2 Route 2: Tiffen Lane

The 9.1km Tiffen Lane route is the shortest of the three proposed options. The route connects Racecourse and Pourerere Road by following the Tiffen Lane Kiwi Rail corridor across around 1.5km of private land. There is a possibility that 60% of the Tiffen Lane crossing could utilise land already owned by Council, however CHBDC have yet to confirm this. The shorter route allows for consideration of lower pump flows and a smaller rising main diameter due to the lower static head and shorter length.

3.1.3 Route 3: State Highway 2

The SH2 route is the longest of the three running for 10.6km along Racecourse Road and down SH2. This route avoids the high point on Ireland Road and the private land acquisition outside of the standpipe area at the cost of additional length and complexity of construction on SH2.

3.2 Route Option Concept Cost Estimate

Costing for the concept routes was completed by Beca. These costs were based on the concept design information, with rate information taken from the wider wastewater strategy NPV and the recently received CHBDC watermain tenders. Due to the high level of design it was agreed that all routes will be costed with the same rising main and flow sizing. This was based on an early concept design of a DN250 PE100 PN16 pipe with duty standby submersible pumps delivering a flow of 33 L/s.

Table 2: Route Option Concept Level Comparative CAPEX Costs*

Route Name	Cost Estimate (Ex GST)
Route 1: Ireland Road	$6,530,000
Route 2: Tiffen Lane	$6,230,000
Route 3: State Highway 2	$6,850,000

* All estimates should be considered as high-level concept design estimates at Class 4, intended for options appraisal only.

Due to the similarities between the routes concept level operational and maintenance costs were expected to be the same. Due to this no OPEX costing or comparison was done for the options.

The cost estimates will need to be adjusted following completion of concept design.

3.3 Route Multiple Criteria Analysis

The described routes were subject to a Multiple Criteria Analysis (MCA). The criteria and weighting for this analysis was discussed and agreed with CHBDC both prior and post its completion. The chosen attributes were:

- Cost — Capital construction cost.
- Complexity — Risk and issues related to construction.
- Impact — Effects on local area and people (private land use, road reserve construction, etc).
- Consentability — Risk and issues related to consent strategies.
- Technical Difficulty — Risk and issues related to design work.
- Future proof-ability — Ability to tie-in with future WWTP plans.

Beca and CHBDC agreed that weighting should be increased for both the cost and future proof-ability criteria. This was a consequence from the risk workshop detailed in Section 9.1, where it was noted that the design flow and size of the rising main could have significant cost implications for future WWTP sizing works. Operating costs were not considered at this stage due to the high-level design having very similar operational costs for each option.

The full multiple criteria analysis can be found in Appendix A. Below is a table summarising the results of the analysis and the positive and negative attribute of each route.

Table 3: Route Selection MCA (Condensed)

Criteria	Otane to Waipawa Rising Main Route Multi-Criteria Assessment					
	Route 1: Ireland Road		Route 2: Tiffen Lane		Route 3: State Highway 2	
	Risk Rating	Weighted Score	Risk Rating	Weighted Score	Risk Rating	Weighted Score
CAPEX Costs (Weighted)	Moderate	0	Low	2	High	-2
Complexity	Low	1	Moderate	0	High	-1
Impact	Moderate	0	High	-1	High	-1
Consent Difficulty	Very Low	2	Low	1	Moderate	0
Technical Difficulty	High	-1	Moderate	0	Moderate	0
Future Proof-ability Risk (Weighted)	Very High	-4	Low	2	Very High	-4
Summary		-2		4		-8

3.4 Final Route Selection

The final MCA supported the selection of the Tiffen Lane option. CHBDC approached the landowners in the area to gauge the attitude toward the use of the private land and received no concerning responses. It was also noted that strips of crown land adjacent to the railway may extend outside the rail corridor fence. Future design stages would be able to consider the feasibility of using these areas for the rising main route. Furthermore, it was deemed that there may also be a future option on the route to construct the main on the eastern side of the rail, avoiding the need for two rail crossings.

The lower height and shorter length of the Tiffen Lane route also allowed the consideration of pumping options outside of the 33L/s submersible arrangement originally allowed for in the MCA. These are discussed further in Section 4.1.

Due to the above and the outcome of the MCA it was agreed with CHBDC that Option 2: Tiffen Lane, would be progressed as the preferred route for the rising main design.

4 Pump Arrangement Option Selection

4.1 Pump Options

4.1.1 Early Concept Design

In the early concept design stage, progressive cavity pump options were not preferred due to potential delays in the supply of high-pressure pipe and CHBDC preference for submersibles. Series pumping was also not preferred due to possible complexities or issues with operation of pumps in that configuration.

Hence, a submersible pump selection with a flow of 33L/s was adopted for the rising main early concept design stage. This was also partly due to Ireland Road being the preferred route in the early design. The length and static head of this route and the lack of suitable low flow pumps led to the initial selection of higher flow pumps to meet the system head requirements.

Several issues were highlighted with this option as the project progressed. Firstly, as discussed in Section 2.2.3, the high flows compared to Otane's low ADWF would result in a significant increase in the sizing and cost of the future Waipawa WWTP inlet works. It would also potentially result in a large volume of storm flow being delivered to the future WWTP, again possibly increasing the cost of the WWTP upgrades. Furthermore, the residence time in the rising main would cause the sewage to go septic, creating issues with odour and corrosion at vent points along the rising main.

4.1.2 Revisited Concept Design

The selection of the Tiffen Lane route in the MCA allowed Beca to revisit the pumping arrangements available. The reduced head requirement presented by the route allows for different pump selections. The resulting options were able to reduce the pumped flow from 33L/s to the 12-21L/s range.

Furthermore, an agreement was made that there will be future option to store peak wet weather flow at the Otane site. The design of this storage will be part of future works outside the scope of this report.

Beca had initially asked CHBDC if they wish to consider progressive cavity pumps as a potential pumping option. CHBDC had expressed that they prefer submersible centrifugal pump solutions due to the benefits of ease of maintenance and the standardising of both pump supplier and parts in the region. However, due to the selection of the Tiffen Lane route, a progressive cavity pump may be able to provide value via a single pump station solution, something that cannot be achieved by submersible pumps.

The pumping options currently considered are as follows:

a. Centrifugal Pumps (Submersible or Dry Mounted)

Due to the limits of the available pumps the centrifugal pump option will require two pump stations operating at 20.5L/s. Due to the tight design envelope of the Tiffen Lane route it is likely that these pumps stations require a series pumping arrangement to achieve the required head. Based on a duty standby arrangement, this could result in 4 pumps at each pumping station. While this will increase the maintenance and capital cost of the option there are still benefits of a centrifugal pump system that should be considered. Centrifugal pumps are familiar to CHBDC Operations and are regarded as easier to maintain and repair. They will also not require any non-standard pipe sizes on the rising main route. It should be noted that, as mentioned previously, series pumping systems are relatively uncommon with raw wastewater due to perceived complexities with operations of pumps in that configuration.

b. Progressive Cavity Pumps

A progressive cavity arrangement option has the potential to require only one pump station. This arrangement will require a PN25 pipe to mitigate the high pressures at the Otane end of the rising main. A PN25 pipe is not typically stocked by suppliers in New Zealand and may require the Contractor to place an

order for manufacture. Thus, the delivery timeframe for this PN25 pipe may clash with the programme planned for the co-trenching construction.

A second option is to use a standard PN16 pipe and allow for two pumping stations. This option forgoes the benefit of a single pumping station in favour of quicker and cheaper pipe supply.

Mono pumps have recommended progressive cavity pump models for both options. Their proposal requires pre-pump maceration to stop large solids blocking or damaging the pump. These macerators inherently increase the maintenance for a pumping station. It should also be noted that progressive cavity pumps typically require more maintenance than submersibles, with the stator possibly requiring replacement each year.

4.1.3 Proposed Option Table

Below is a table summarising the characteristics of the various pump arrangement options proposed. All options proposed use Route 2 detailed in the route selection MCA.

Table 4: Pump Arrangement Options

Option	Pump Type	No of Pump Stations	Pumps per Station (Total)	Pipe Details (mm)	Design flow (L/s)
Route 2, A	Progressive	1	2 (2)	PE100 DN200 PN25	15.7
Route 2, B	Progressive	2	2 (4)	PE100 DN160 PN16	12.7
Route 2, C	Submersible	2	2-4 (4-8)	PE100 DN200 PN16	20.5

4.2 Pump Option NPV

Following the identification of the 3 pumping options a Net Present Value analysis was completed. This analysis was undertaken to compare the relative, long-term costs of the various pumping configurations. The full NPV analysis can be found in Appendix C.

4.3 Pump Option Selection and Design Flow

Pumping Option 2A (Tiffen Lane route with a single pump station, progressive cavity pumps and PE100 DN200 PN25 pipeline) provided the lowest overall NPV. As such, Option 2A was discussed and agreed with CHBDC as the preferred pumping option for the rising main.

Note that as mentioned in Section 4.1.1 the management of flows, peaks and pump station design are to be considered as part of Otane pump station design and Waipawa/Waipukurau design.

5 Pump Station Concept Location Design

5.1 Otane Pump Station

Option 2A requires a single pump station located close to the Otane treatment pond. As per CHBDC request, neither the preliminary nor detailed design of the pump station layout was part of Beca's scope of works. It is expected that the pump station will be designed in the future as part of a separate package of works.

Beca did undertake an early stage concept location design to confirm the feasibility of locating the pump station at the Otane treatment pond. The location was selected based on the following criteria:

- Connection to the Otane outflow for transfer of treated effluent prior to the upgrade at the Waipawa WTP.
- Connection to the Otane inflow for transfer of raw sewage post the upgrade of the Waipawa WTP.
- Available land based on a concept pump station layout, noting that CHBDC have discussed purchase of the field to the east of the pond.
- Proximity to the pond embankment.

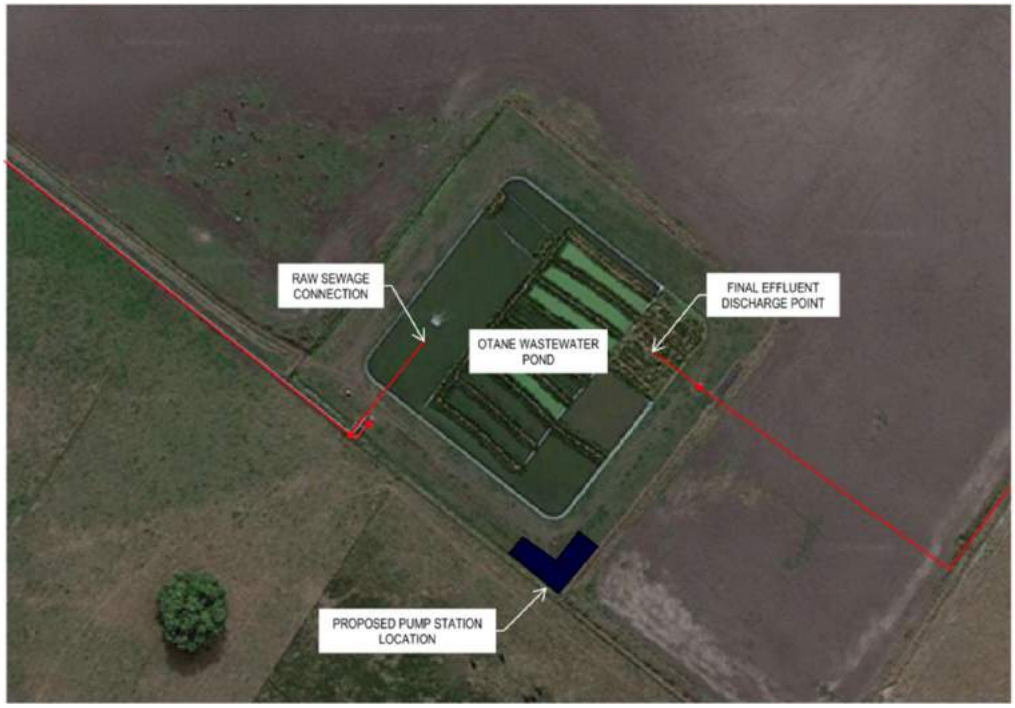

Figure 4: Proposed location for Pump Station

The selected location in Figure 4 above is considered suitable for the concept pump station location due to the easy connection to both final effluent and raw sewage, allowing flexibility in the staging process.

6 Rising Main Detailed Design

6.1 Delivery Staging

CHBDC's proposed second potable water supply pipeline to Otane that runs alongside to approximately 3.2 km of the proposed Otane wastewater rising main. To allow the water and wastewater rising mains to be constructed under the same contract the Otane wastewater rising main was split into several stages. This enabled the design of first section of the rising main, shared with the water supply, to be the fast tracked to meet the construction programme.

The rising main detailed design and construction was split into three stages:

- Stage 1: Starting at Lawrence Street in Otane and terminating at the railway line crossing at Racecourse Road. Refer to Appendix D for the final set of detailed design drawings. Design and construction of Stage 1 pipeline was fast-tracked to enable early construction of this section of Otane to Waipawa rising main.
- Stage 2: Starting from the railway line crossing at Racecourse Road along the railway line and terminating 20m into the Waipawa WWTP.
- Stage 3: Connection of Stage 1 and 2 to the Waipawa WWTP inlet works and Otane pumping station. Design will be done alongside the design of the WWTP upgrade work.

6.2 Route Optimisation

Route optimisation was discussed and reviewed with CHBDC. The resulting design actions to optimise the pipeline are listed below:

1. Where possible the pipeline alignment has been designed to run in the berm adjacent to the road, minimising the need for reinstatement of the existing pavement.
2. The alignment has avoided crossing land owned by Kiwi Rail and is compliant with KiwiRail distancing requirements.
3. Consideration has been given to keeping the new rising main a safe distance from existing services. Where possible the rising main has been moved to the side of the road with no existing services.

6.3 Design Standards

The following design standards where used to support design decisions:

- NZS 4404:2010 Land development and subdivision infrastructure.
- AS/NZS 2566.2 Buried flexible pipelines, Part 2: Installation.
- AS/NZS 4130:2009 Polyethylene (PE) pipes for pressure applications.
- TNZ F/1 Specification for Earthworks Construction.

6.4 Detailed Route Design

6.4.1 Pipe Sizing and Pump Selection

The chosen size and material for the pipe at the concept design stage is OD200 PE100 PN25. Refer Section 4.1.1.b. and Section 4.3 for explanation on pipe and pump selection.

6.4.2 Material Selection

Polyethylene pipe (PE) is the recommended material for the rising mains, due to:

- PE is inherently resistance to corrosion, unlike concrete lined steel or ductile iron.

- Restrained joints for PE are more seismically resilient compared to rubber ring joints, and do not require thrust restraint at changes of direction.
- PE is more flexible than other materials which helps to mitigate surge effects and accommodate movement.
- PE is more cost effective than ductile iron or steel, and generally there is not a significant difference in installed cost compared to PVC.
- Ductile iron or steel pipe is proposed for above ground pipework including bridge crossings.
- PE is capable of being installed via directional drilling. Contractors may wish to consider this installation methodology over open trenching.

6.4.3 Valves

- A combination air valve (non-slam) for wastewater are proposed at all high points in the rising main. As Stage 1 and Stage 2 of the rising main will be completed 1-2 years ahead of the rising mains operation these air valves will be installed as part of future work and need to be installed prior to commissioning the pipeline. In the interim, blind flanges will be used.
- All air valves have been designed to allow retrofitting of activated carbon units above ground. Where the rising main is located in the road corridor, air valve chambers have been positioned in the closest berm.
- Scour valves are proposed at all low points except for crossings under rivers.
- Scour valve access covers need to be trafficable and lockable.

6.4.4 Trench Design

Trench details have been specified for both trafficable and non-trafficable area. Trench embedment material has been selected and specified as per AS/NZ 2566.2 Section 5.4.2 for both. Gap 65 or other approved backfill material compacted to 90% MDD to be used. Surface will be reinstated to match the existing surface material or to the road owner's specification if in the trafficable area.

In addition, trenching to comply with standard requirements of NZS 4404:2010 – Drawing sheet CM-001.

6.4.5 Staged Pipeline Termination Details

Termination details for the two construction stages have been included in the design. This is required to seal the pipe from water, sediment and vermin ingress in between the Stage 1, Stage 2 and WWTP upgrade construction.

Stage 1

Stage 1 of the Otane rising main terminates adjacent to the railway line crossing on Racecourse Road. The termination detail includes a blanking flange attached to either end of the rising main section. Stage 2 pipeline will be connected to Stage 1 by removing this blanking flange and connecting via a new flanged connection.

Stage 2

As Stage 2 will connect to Stage 1 and terminate 20m into the Waipawa WWTP site only one termination point is required. This termination will be done using a blanking flange attached to a flange as per Stage 1.

6.4.6 Future Rising Main Discharge Design (Stage 3)

Connection and discharge details to the Waipawa WWTP and Otane PS cannot be confirmed as design of these elements has yet to occur. Connection to the Otane PS is not foreseen to be a high-risk item, however the WWTP discharge requires a greater level of consideration. The Otane rising main design team has considered options for discharge as a preliminary level, taking into account the information available on the Waipawa WWTP upgrade work.

The discharge of the rising main is required to be 11-12m above the ground level at the WWTP. This is driven by a high point at Tiffen Lane. (132.23m RL), without a raised discharge the main will have issues with draining when not in use. This is considered poor for pump operation. Also, based on the Waipawa WWTP upgrade development so far, it is probable that the inlet works for the sewage discharge to the WWTP will be:

- Roughly 5m above ground.
- Located on the new expanded site (Waipawa WWTP site in Figure 5).
- Fed by rising mains from the township and the pond.

Two discharge options have been considered for the pipeline discharging to the WWTP (see Figure 5).

1. A new discharge chamber structure atop a nearby hill (possibly requiring a new PS to lift to the inlet works)
2. A new vertical steel standpipe near the inlet that can dissipate the 11m head and discharge to elevated inlet works

Figure 5: Discharge Options at Waipawa WWTP

Although the discharge chamber on the hill is less visually intrusive and more seismically suitable, the drop under Pourerere Road and the lift to the inlet works could require a second pump station near the WWTP. This option would also require obtaining permission from the landowner of the proposed site for hill discharge.

In comparison, a discharge stack will allow for onsite odour control options and is more flexible to accommodate changes to the WWTP design. It should be noted that there are visual implications with the discharge stack, however there may be ways to mitigate this in the future design.

The detail design of the above is to be done alongside the detail design of the WWTP upgrades. This will allow confirmation of the final layout of the inlet works.

7 Cost Estimate

A cost estimate has been prepared for Stage 1 and Stage 2 to allow CHBDC to budget for the expected construction costs. The estimates are based on detailed design information and hence exclude professional design fees. In addition, contract management and construction monitoring costs have not been allowed for since council prefers to manage this in-house. The pipeline estimate is deemed to be a Class 2 estimate (based on detailed design) in terms of the AACE Cost Estimate Classification System guidelines. The probable accuracy range of the estimate is likely to be no better than -10% to +15%.

Table 5: Summary of Construction Cost Estimate Stage for 1 and 2

	Stage 1	Stage 2
Tender Design Estimate	$ 1,672,000.00	$ 1,450,000.00
Contingency (10%)	$ 170,000.00	$ 145,000.00
Total	**$ 1,842,000.00**	**$ 1,595,000.00**

The above estimates assume a competitive tender process utilising an open trench installation. No allowance has been made in the Stage 1 estimate for the economies of scale offered by installing the rising main under the same contract as the new watermain.

A full schedule of prices for each stage can be found in Appendix E.

The costs associated with the Stage 3 connection to the Waipawa inlet works is excluded from this estimate.

8 Safety in Design

A detailed Safety in Design Risk Register can be found in Appendix F. The most critical risks identified, and their proposed mitigation measures are listed in the table below:

Table 6: Key Safety in Design Risks and Proposed Mitigation

SiD Ref	Phase	Key Risks and Consequences	Proposed Mitigation
1.07	Construction	Construction activity resulting in striking of existing buried services and thrust blocks. **Consequences:** • Injury and/or death to personnel. • Damage to existing services/ stakeholder assets resulting in increased time and cost.	Review services relocation design/as built prior to construction, including existing thrust blocks. Learnings from the watermain construction have been passed on to from CHBDC to designers. • Use of experienced staff in construction teams. • Use of excavation permit system. • DBYD and service proving (non-destructive digging) prior to construction.
1.14 & 2.06	Construction, Operation and Maintenance	Proximity to rail causing plant, staff or maintenance personnel collision with rail movement. **Consequences:** • Injury and/or death to personnel.	Alignment is kept as far from tracks as possible and is compliant with KiwiRail requirements. No work within the railway track is required. Contractor to be aware of the close proximity to the rail and ensure controls are in place to stop plant and staff straying into the rail corridor.
2.04	Operation & Maintenance	Access to valves for maintenance. **Consequences:** • Damage to valve during maintenance. • Risk of cars on road when accessing valves for maintenance causing serious harm or death	Air and scour valves have been positioned outside of road corridor in berm

9 Project Risks

9.1 Risk Register

A risk workshop was held on the 1 July 2019 with Beca and CHBDC in attendance. The workshop aimed to highlight project risks, the results of this meeting are recorded in the Project Risk Register in Appendix B.

Wider CHBDC wastewater strategy risk workshops have also occurred to date. These workshops have incorporated some of the risks presented by the wider conveyance strategy CHBDC are considering as part of the wastewater upgrades. These workshops supersede the risk workshop held for Otane and can be found in the CHBDC Waipawa and Waipukurau WWTP Upgrade Scheme Concept Design, 24 July 2020.

Appendices

Appendix A – Route Selection Multiple Criteria Analysis

Appendix B – Project Risk Register

Appendix C – Options Net Present Value Analysis

Appendix D – Detailed Design Drawings

Appendix E – Preferred Option Cost Estimate

Appendix F – Safety in Design Risk Register

A

Appendix A – Route Selection Multiple Criteria Analysis

Criteria	Description	Weighting	Otane to Waipawa Rising Main Route Multi-Criteria Assessment											
			Route 1: Ireland Road				Route 2: Tiffen Lane				Route 3: State Highway 2			
			Risk Rating	Comment	Score	Weighted Score	Risk Rating	Comment	Score	Weighted Score	Risk Rating	Comment	Score	Weighted Score
CAPEX Costs	Capital construction cost excluding land acquisition costs, insurance, central overheads, rates and compliance fees. Risk related to cost amount.	2	Moderate	Shares 3.5km of its 9.7km route with the watermain. Concept estimate of $ 6.53 million.	0	0	Low	Shares 4km of its 9.3km route with the watermain. Concept estimate of $ 6.23 million.	1	2	High	Shares 5km of its 10.6km route with the rising main. Concept estimate of $ 6.85 million.	-1	-2
Complexity	Risk and issues related to construction. Consideration given to the overall pipeline length and any additional design alterations that might be required to minimise effect to the existing infrastructure.	1	Low	No unusual design requirements	1	1	Moderate	Route will possibly involve additional design of rail crossings	0	0	High	Route is the longest option with sections running on SH2. Will likely be more issues with service crossings. Will also require rail crossings.	-1	-1
Impact	Effects on local area and people (disruption to traffic during construction, private land use, road reserve construction, etc)	1	Moderate	Private land required for standpipe on hills close to WWTP.	0	0	High	Tiffen Lane/Rail Corridor requires crossing approximately 1.5km of private land, however there is a chance local crown land could be used. Private land required for standpipe on hills close to WWTP.	-1	-1	High	SH2 work likely to disrupt both local and regional traffic. Private land required for standpipe on hills close to WWTP.	-1	-1
Consent Difficulty	Risk and issues related to consent strategies	1	Very Low	No unusual consents	2	2	Low	Agreement from Kiwi Rail required for crossings.	1	1	Moderate	Permission to work in SH2 will be more complicated that local roads. Rail crossing will need agreement.	0	0
Technical Difficulty	Risk and issues related to design work. Feasibility in terms of special design requirements that may be required for each route.	1	High	Very high standpipe requirement (20-25m). Will require the use of the steepest hill to the north of the WWTP.	-1	-1	Moderate	Additional rail crossing design and liaison with Kiwi Rail for crossings. Standpipe 10-15m high, can use smaller hill or possibly located at WWTP.	0	0	Moderate	No unusual design requirements. More service crossings present on SH2 but unlikely to affect design. Rail crossing design required.	0	0
Future Proof-ability Risk	Ability to tie-in with future WWTP plans. Options assesssed based on current design's ability to cater for future demand and capacity.	2	Very High	The increased flow rate (33 l/s) will lead to upsizing of future WWTP inlet works (screens, grit removal etc).	-2	-4	Low	Options for lower flow rate. Means that sizing of WWTP will be smaller than other options. However some risk remains due to possible storage requirements at Otane.	1	2	Very High	The increased flow rate will lead to upsizing of future WWTP inlet works (screens, grit removal etc).	-2	-4
Summary						**-2**				**4**				**-8**

B

Appendix B – Project Risk Register

Context:

Stage 1:
Retain Otane Ponds, convey pond effluent
Otane Rising Main discharges to Waipawa River
Waipawa WWTP treats only Waipawa wastewater
Storm events buffered by Otane and Waipawa ponds
I&I Programme and flow monitoring underway

Stage 2:
Retain Otane Ponds, convey pond effluent
Otane Rising Main discharges to Waipawa River
Waipawa WWTP upgraded
Construction of required undertaken storm storage at WWTP
Otane pond used as buffer for storm and any rising main down time from WWTP construction.

Stage 3:
Otane ponds taken offline. Rising main switched to raw sewage.
Rising main discharge location now WWTP inlet.
Waipawa WWTP upgrades completed with storm storage.
Pond decommission phased with Otane storage construction (if required)

				Unmitigated Risk					Residual Risk					
ID	Category	Title	Risk Description	Risk Topic	Likelihood	Consequence	Risk Score	Proposed Mitigation	Likelihood	Consequence	Risk Score	Status	Owner	Comments
1	Threat	Consenting Strategy	Consent for the Otane pond expires in 2021. CHBDC will not complete the rising main till after this expiration date. The result is possible unconsented discharge from Otane ponds while the rising main and pump station is completed.	Reputational	Almost Certain	Major	Extreme Risk	Strategy could possibly be to seek short term consent and show committed works and funding towards a future wastewater scheme involving the decommissioning of the Otane outfall. There are also several other possible solutions. Beca strongly recommend that CHBDC focus on developing an overall consenting strategy for the region, including the changes at Waipawa and Waipukurau. Beca are willing to assist in this if required.	Possible	Major	Very High Risk	Open	CHBDC	Further controls to be confirmed. CHBDC aware of the risk and are actively progressing mitigation strategies.
2	Opportunity	Otane Rising Main - Sharing construction phase with the awarded watermain project.	There is an opportunity to construct around 3-5km of pipework in the same trench using the same contractor. However for this to occur Beca's rising main design must meet the timeframes set out by the watermain construction (start date 8 July, rising main drawings by 19 Aug) . There is a risk that this opportunity is missed due to delays in the rising main design.	Financial	Possible	Moderate	High Risk	Beca and CHDBC to fast track the rising main design to align with the upcoming watermain installation being undertaken by Fulton Hogan. CHBDC have shared the expected construction programme with Beca. Beca have notified Fulton Hogan of the expected pipe size and class to allow them to programme the materials order. Design parameters for the directional drill have also been supplied.	Unlikely	Moderate	Medium Risk	Open	Beca	Beca/CHBDC to check if possible change in programme allows for PN25. FH my now start wastewater rising main in Nov/dec after the watermain is finished. Installation to be directional drill.
3	Threat	Otane Rising Main - Sharing construction phase with the awarded watermain project.	There is a risk that the prices for the wastewater rising main supplied by Fulton Hogan will not be value for money due to the lack of a competitive tendering environment.	Financial	Possible	Moderate	High Risk	CHBDC allowed a provisional item for the wastewater rising main in the watermain tender. However the pipe size for the rising main is likely to be larger than the one specified in the tender. It is recommended that CHBDC consider the value for money the combined construction offers once Fulton Hogan supply a cost for the wastewater rising main installation.	Unlikely	Moderate	Medium Risk	Open	CHBDC	
4	Threat	Otane Rising Main - Design Flows	There is currently no reliable wet weather flow data for the Otane ponds inlet or outlet. During the wet weather events the outlet weirs submerge leading to unreliable data. The new inlet meter has yet to record a wet weather event. Due to this there is a risk that the new rising main is under or over designed leading to abortive work.	Technical	Possible	Moderate	High Risk	Otane has very low ADWF in the order of 1-2 l/s, it is not feasible to pump such a low rate over the distance of the rising main. The nearest suitable submersible pumps deliver a flow of 30-35 l/s. Due to this the design flow is driven by pump selection instead of peak flow data. Note that higher pump flows will have knock on effects regarding the sizing of the WWTP inlet and odour control.	Unlikely	Moderate	Medium Risk	Open	Beca	Beca (AL) to do prepare NPV for PC pumps vs submersible options.
4	Threat	Otane Rising Main - Design Flows (Sub Risk)	The high pump rate compared to the ADWF causes there to be increase in inlet works sizing at the Waipawa WWTP. This increase in cost changes the outcome of the wider wastewater strategy NPV.	Technical	Possible	Critical	Very High Risk	Beca is investigating any route or hydraulic design changes that may facilitate lowering the pump rate. A risk remains that the flow rate lower than 33 l/s is not feasible. Should this be the case Beca and CHBDC should revisit the effects on the wastewater NPV.	Possible	Critical	Very High Risk	Open	Beca	beca (JC) to produce Cost benefit analysis on Otane.
5	Threat	Otane Rising Main - Growth	The rising main design flows should allow for growth in the Otane catchment. Without this there is a risk that the rising main will be undersized in years to come.	Technical	Possible	Moderate	High Risk	The use of 30 l/s pumps will cover any expected growth.	Rare	Moderate	High Risk	Open	Beca	
6	Threat	Otane Rising Main - Design Flows (Sub risk - Wet weather flow exceeds pump capacity)	As there is no reliable wet weather flow data there is a risk that actual peak flows are higher the selected pumps. This would cause flooding at the Otane pump station.	Reputational	Possible	Major	Very High Risk	Flooding can be controlled by either I&I remediation work or wet weather storage at the pump station. It is strongly recommended that an I&I solution be progressed. The greater the reduction of the peak flows the lower the risk consequence for the WWTP hydraulic load. It is expected to be feasible to construct storm storage at Otane if necessary. This solution would however likely be the most expensive option.	Unlikely	Major	High Risk	Open	Beca/CHBDC	Accurate flow data is crucial to better understanding this risk going forward. CHBDC to pass on information as it becomes avalible.Agreed that Beca input in to the I&I programme is likely not critical.
7	Threat	Otane Rising Main - Design Flows (Sub risk - Waipawa WWTP Hydraulic Load)	The high flow rate of the submersible pumps compared to the ADWF will result in an increased flow being delivered to the WWTP. This increased flow could require a larger inlet works (screening and grit removal) at the WWTP.	Technical	Almost Certain	Moderate	Very High Risk	Waipawa WWTP design work will need to consider the effects of PWWF on the future treatment plant. The storm flow could be controlled/stored local to the WWTP. It is expected that this risk will be addressed in future work.	Unlikely	Moderate	Medium Risk	Open	Beca	High flow would have biggest effect on inlet works. Beca can implement this as a design consideration.
8	Threat	Otane Rising Main - Flow Characteristics	It is expected that the Otane ponds will be decommissioned in the future in order to pass raw sewage to the future upgraded Waipawa WWTP. Pond effluent and raw sewage have different conveyance characteristics, the future change could lead to issues with pump station design.	Financial	Possible	Major	Very High Risk	Beca will design a rising main for conveyance of raw sewage. Pond final effluent will have lower viscosity and sliming than the raw sewage. This design path is a suitable conservative strategy.	Unlikely	Major	High Risk	Open	Beca	Staging of odour requirements will occur as project progressess.
9	Threat	Otane Rising Main - Stage 3 Odour	The future plan to change to pumping raw sewage to Waipawa will likely result in the sewage in the rising main becoming septic due to the expected residence time. Septic sewage will cause odour issues at both the intermediate pump station, air valves and the Waipawa WWTP.	Reputational	Almost Certain	Moderate	Very High Risk	Beca will allow space for odour control in the form of a biofilters at the intermediate pump station and Waipawa WWTP. Dosing for Odour control at Otane and the intermediate pump station is also a possible option. Air valves will be designed to allow the retrofitting of carbon units if required. H2S corrosion will be mitigated via use of PE material in the rising main and corrosion resistant fittings. The intermediate pumping station (and WWTP) will be designed with corrosion resistant lining.	Unlikely	Moderate	Medium Risk	Open	Beca	Inlet works will need to be designed accordingly. Risk of odour in pond if retained and kept online.
10	Threat	Otane Rising Main - Stage 1/2 Odour	During stage 1/2 the rising main will discharge pond effluent. Due to the extended time there is a risk that the pond effluent will be septic on arrival, causing odour issues.	Reputational	Likely	Minor	High Risk	Beca advise allowing for a biofilter to be constructed in the rising main discharge location. This filter could possible be reused in the later stages of the project.	Unlikely	Minor	Medium Risk	Open	Beca	

11	Threat	Otane Rising Main - Stage 1/2 Discharge Consent	Connecting the Otane rising main to the Waipawa WWTP will require a change in consent.	Technical	Almost Certain	Moderate	Very High Risk	Consent will need to be adjusted to allow for increased flow and load. This issue should be integrated in to the wider consent strategy highlighted in item 1.	Possible	Moderate	High Risk	Open	Beca/CHBDC	Linked to consent strategy. (item 1)
12	Threat	Otane Rising Main - Land Owner Objections	Private land use is required for the rising main standpipe (now likely for all routes) and the intermediate pump station. If landowners are resitent to easment or land purchases the project may be delayed.	Technical	Unlikely	Major	High Risk	CHBDC are currently approaching landowners to gauge attitude towards land aqusition. Early awareness of the issues will allow Beca to adjust designs to accomidate if required. A risk remains that refusal from landowners to release land in key locations may result in addtional design and construction cost and time (e.g. i design of draining rising main if no stand pipe, design of 3 pumping stations due to poor location of second pump station).	Unlikely	Major	High Risk	Open	Beca/CHBDC	
13	Threat	Otane Rising Main - Iwi Objection	There is a risk that local Iwi resist the rising main plan and the greater wastewater strategy. Notably the idea of transporting waste from one township to another my be disputed.	Reputational	Possible	Moderate	High Risk	CHBDC will need to consider possible Iwi attitudes. Beca would advise that communication begin ASAP to gain an understand of any issues that may be present.	Possible	Moderate	High Risk	Open	CHBDC	Communications underway and to continue. Will be more focused when options are confirmed. Related to consent application as discussed before. Cultural impact assessment will be required.
14	Threat	Future Waipawa WWTP Design - Septic Sewage	The septic raw sewage delivered from Otane in stage 3 will have effects on the process of the plant. This could lead to possible consenting issues.	Technical	Possible	Minor	Medium Risk	Beca to consider the treatment requirements in future Waipawa treatment design phases.	Unlikely	Minor	Medium Risk	Open	Beca	Mostly odour and corrosion issue. Not enough flow volume to have bacteria issues.
15	Threat	Future Waipawa WWTP Design - Compatibility	The fast tracking of the rising main has some wider project risks. Investments made now, while the greater treatment strategy is in a concept stage, may not necessarily be the most cost effective for the long term.	Financial	Possible	Moderate	High Risk	It is understood that the combination of the rising main and watermain projects represents a significant financial opportunity and this is CHBDC's preference.	Possible	Moderate	High Risk	Open	CHBDC	To some extent the driving of the project is supported by future consent requirements.
16	Threat	Future Waipawa WWTP Design - Concept Design Changes	There is a risk that the wastewater strategy changes causing the Otane rising main to become redundant. This could be caused by, push back from the council, an unexpected NPV favouring retaining the Otane pond or local public opposition to the wastewater strategy.	Financial	Possible	Major	Very High Risk	This risk is inherent due to the fast tracking of the rising main. It is recommended that CHBDC communicate the expected plans with the required party to pre-empt any potential issues early.	Possible	Major	Very High Risk	Open	CHBDC	Current council table very supportive of the scheme.

C

Appendix C – Options Net Present Value Analysis

85 Molesworth Street
PO Box 3942, WELLINGTON 6140, New Zealand
T: +64 4 473 7551 // **F:** +64 4 473 7911
E: info@beca.com // **www.beca.com**

Central Hawke's Bay District Council
PO Box 127
Waipawa 4170
New Zealand

13 August 2019

Attention: Darren de Klerk

Dear Darren

Otane to Waipawa Wastewater Rising Main Design – Pump Options Net Present Value Analysis

As part of the Otane to Waipawa Rising Main design, a net present value (NPV) analysis was undertaken to compare the relative, long-term costs of various pumping configurations for the selected rising main route. This letter describes the NPV analysis undertaken for the different pumping configurations and is intended to form part of the *Otane to Waipawa Wastewater Rising Main Design Report* by Beca (the Report).

1 Project Background

The project involves installing a new wastewater rising main, approximately 9km in length, from the existing Otane wastewater pond to the existing Waipawa wastewater treatment plant (WWTP). Refer to the Report for further details regarding the project background and existing sites.

1.1 Pipeline Route

Three potential routes for the rising main were identified:

- Route 1: Ireland Rd.
- Route 2: Tiffen Lane.
- Route 3: State Highway 2.

These routes are described in Section 3 of the report and are shown in Figure 1 below. The report describes the analysis undertaken to compare the three route options and Route 2: Tiffen Lane was recommended as the preferred option. This recommendation was accepted by Central Hawke's Bay District Council (CHBDC) by email on 15 July 2019 and it was agreed the design of the rising main would progress with Route 2.

Route 2 is the shortest of the three routes, at 9.1km, and connects Racecourse and Pourerere Road by following the Tiffen Lane Kiwi Rail corridor across around 1.5km of private land. There is a possibility that 60% of the Tiffen Lane crossing could utilise land already owned by Council, however CHBDC have yet to confirm this. The shorter route allows for consideration of lower pump flows and a smaller rising main diameter due to the lower static head and shorter length.

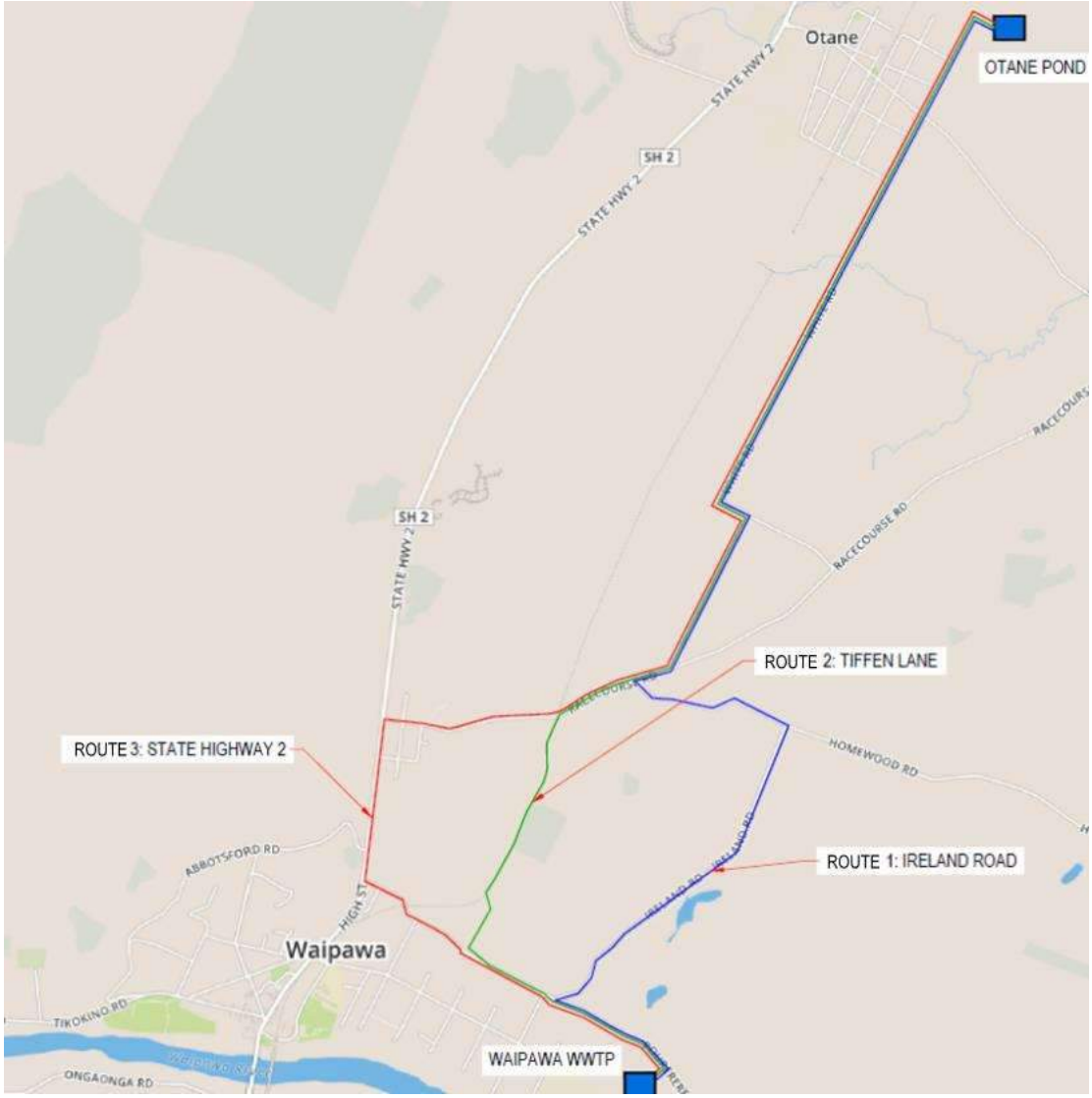

Figure 1 Wastewater Rising Main Route Options

1.2 Pumping Schemes

The report discusses three pumping options for Route 2 and the potential benefits and risks associated with each option. These options are summarised in Table 1.

Table 1 Route 2: Tiffen Lane Pumping Options Summary

Option No	Pump Type	No of Pump Stations	Pumps per Station [Total]	Pipe Details, mm	Design flow, L/s
Route 2, Option a (2a)	Progressive cavity	1	2 [2]	PE100 DN200 PN25	15.7
Route 2, Option b (2b)	Progressive cavity	2	2 [4]	PE100 DN160 PN16	12.7
Route 2, Option c (2c)	Submersible	2	2-4 [4-8]	PE100 DN200 PN16	20.5

With both options 2a and 2b, the progressive cavity pumps (which are self-priming) will be dry mounted, drawing from a wet well at each pump station, whereas for option 2c, the pumps will be mounted inside a wet well at each pump station. Macerators will be required for both options 2a and 2b (one at each pump station) due to the use of progressive cavity pumps. Macerators will not be required for option 2c.

2 CAPEX Estimates

2.1 Basis of Capital Cost Estimates

The following assumptions have been made for the purpose of developing appropriate CAPEX cost estimates, commensurate with the level of design detail.

2.1.1 General

- All CAPEX expenditure occurs in 2019.
- The base date of this estimate is August 2019 and does not include any provision for escalation in costs prior to or during implementation of the works.
- CAPEX costs are based on previous cost estimates undertaken during the pipeline route comparison activity as described in the Report. They are based on high level concept design information with rate information taken from the wider wastewater strategy NPV and the recently received CHBDC watermain tenders. Amendments have been made for the different pump models and pipe supply rates. Cost estimates are only able to be prepared at a very high level.
- Costs are not absolute and are not bankable. The costs have been developed to compare the relative magnitude of the whole of life costs of the different options and are not for the purpose of setting long term plan budgets.
- Contractors have unrestricted access to the site during construction and have access to site services such as temporary power and water during construction.
- The works are procured with a traditional tender process with competitive tenders.

2.1.2 Rising Main Components

- Pipe materials as per Table 1.
- The Pump stations have not been sized to provide storage.
- Pump stations consist of GRP wet-wells and have been priced the same per pump station for all three options. The pump stations for options 2a and 2b will have dry mounted progressive cavity pumps outside the wet well, therefore could result in lower costs compared to the pump stations for option 2c. Relative costs cannot be confirmed until detailed design has been undertaken with

site specific considerations, therefore the same cost per pump station (excluding pumps and macerators) is used for the purpose of this NPV analysis.

- Pump and macerator costs have been provided by Mark Stans at Mono Pumps for options 2a and 2b, and by Tim Hines at Grundfos for option 2c.
- Excavation material is disposed off-site and all bedding and backfill is imported material.

The pumps and macerators used in the cost estimates are shown in Table 2

Table 2 Pumps and Macerators

Item	Option 2a	Option 2b	Option 2c
Pump type: Brand and model (No. of pumps)	Progressive cavity pump (self-priming): Mono E1ADC11RMH (2)	Progressive cavity pump (self-priming): Mono E19BC11RMA (4)	Submersible pump: Grundfos Super Vortex SEV.80.80.185.2.52H.C.N.51D (8)
Macerator Brand and model (No. of macerators)	Muncher CT203 2.2 kW (2)	Muncher CT203 2.2 kW (2)	-

2.2 Costs

CAPEX cost estimates are presented in Table 3. All costs exclude GST and are likely to fall in the range of -20% to +30%. Costs are subject to design development.

Table 3 CAPEX Cost Estimates Summary (Excl. GST)

Item	Description	Cost Basis	Option 2a	Option 2b	Option 2c
1	Pump station works (excluding pumps and macerators)	Based on rates from similar past installations	$450,000	$900,000	$900,000
2	Pumps	Provided by suppliers	$73,800	$87,700	$76,700
3	Macerators	Provided by suppliers	$40,000	$40,000	-
4	Pipe supply & installation (including appurtenances)	Pipe supply provided by suppliers, installation based on rates from recent similar works	$2,574,700	$2,290,000	$2,432,400
5	Crossings (railway and state highway crossings)	High level allowance based on rates from similar past installations	$122,500	$122,500	$122,500
6	Main contractor P&G (including traffic management and environmental management)	Approx. 17% of items 1 - 5	$563,000	$584,000	$595,000

Item	Description	Cost Basis	Option 2a	Option 2b	Option 2c
7	Main contractor margin	Approx. 5% of items 1 - 6	$190,000	$200,000	$210,000
8	Construction contingency	Approx. 20% of items 1 - 7	$800,000	$840,000	$870,000
9	Design development contingency	10% of items 1 - 7	$401,400	$422,500	$433,700
10	Professional fees	Approx. 10% of items 1 - 8	$480,000	$510,000	$520,000
11	Consenting	Nominal	$50,000	$50,000	$50,000
12	Client related project costs	Nominal	$100,000	$100,000	$100,000
		Total	**$5.85M**	**$6.15M**	**$6.31M**

2.3 Exclusions

No provision has been made in the CAPEX cost estimates for the following:

2.3.1 General

- Land acquisition.
- Insurance.
- Central overheads.
- Rates.
- Compliance fees.
- GST.
- Legal costs.
- Increased costs due to currency fluctuations. The estimate currency is $NZ.
- Establishment.
- Capitalised Interest.
- Staffing and training.
- Testing and commissioning.
- Pre-project expenditure.

2.3.2 Physical Works

- Demolition and removal of any existing structures or foundations.
- Removal of contaminated material.
- Landscaping works.
- Ground improvements and/or dewatering.
- Treating and handling of hazardous materials such as asbestos.
- Upgrades to site services such as power supply.
- Relocation of or working around existing services.

3 OPEX Estimates

3.1 Basis of Operational Cost Estimates

The following assumptions have been made for the purpose of developing appropriate OPEX cost estimates, commensurate with the level of design detail:

3.1.1 General

- Renewals and maintenance costs have been annualised over the 30-year NPV analysis period.
- The base date of this estimate is August 2019 and does not include any provision for escalation in costs prior to or during implementation of the works.
- Best endeavours have been made to estimate appropriate operating costs for the purpose of comparing between options.
- Costs are not absolute and are not bankable. The costs have been developed to compare the relative magnitude of the whole of life costs of the different options and are not for the purpose of setting long term plan budgets.

3.1.2 Maintenance, Operations, and Renewals

Requirements for maintenance, operations, and renewals have been determined through discussions with CHBDC staff regarding maintenance of existing similar assets, and through discussions with pump suppliers regarding recommended maintenance. To balance the two opinions, the pump station maintenance, operations, and renewals is assumed to include the following:

a. Regular Operations and Maintenance.

- Operators will top-up oils and complete the installation of minor spares etc., if it is able to be done on site.
- One operator visit per week, per pump station. The operator will complete various checks and complete a wash-out of the pump station.
- Annual clean out for each pump station, consisting of a septic tank truck for approximately 5 hours. It is assumed this will be undertaken two times annually per pump station.
- Annual electrical inspection and complete thermal imaging to check hot spots.
- Quarterly lifting and inspection of submersible pumps.
- Maintenance contractors have unrestricted access to the site and have access to site services such as power and water when required.

b. Asset Maintenance and Renewals

- Pump station servicing costs for options 2a and 2b, as provided by the pump suppliers, has been accounted for four occasions during the analysis period and a full replacement cost has been allowed for at year 20. This has been based on information provided by suppliers and anecdotal information from CHBDC operations staff. These costs have been annualized across the 30-year NPV analysis period.
- Servicing for options 2a and 2b includes:
  - For pumps: replacement of stators, rotors, and mechanical seals,
  - For macerators: replacement of cutters, spacers, mechanical seals, and bearing assembly.
- Submersible pumps will be replaced at year 15.

- Submersible pump servicing costs for the 30-year NPV analysis period have been provided by the pump supplier and have been averaged over the 30-year period.
- Minor electrical works will be required over the pump station life cycle.
- Maintenance of civil components is assumed to include repair of leaks on average every five years and other minor repairs.
- Renewal of civil components (pipeline and pump station, excluding pumps and macerators) is assumed to occur once every 80 years.

3.1.3 Power

- Annual power consumption is based on pumping calculations by Beca using average daily flow rates.
- Power consumption estimates include provision for 0.5% compounding annual population growth. This population growth rate is used as it has previously been agreed with CHBDC and has been used in previous NPV analyses for this project.
- A rate of $0.15/kWh has been used and is assumed to include any daily rates. This is based on aggregated utilities invoices.

3.1.4 NPV Analysis Parameters

- Annual discount rate = 4.5% (compounding).
- Annual inflation rate = 2% (compounding).
- Analysis period = 30 years.

These particular values have been used as they have previously been agreed with CHBDC and have been used in previous NPV analyses for this project.

3.2 Costs

Annual OPEX cost estimates (ignoring inflation and discount rates) are presented in Table 4. All costs exclude GST and are likely to fall in the range of -20% to +30%.

Table 4 OPEX Annual Cost Summary (Excl. GST)

OPEX Cost Item	Cost Basis	Option 2a	Option 2b	Option 2c
Electrical maintenance	1.5% of pump station CAPEX (including pumps and macerators, including 10% P&G and 5% margin)	$9,800	$17,800	$16,900
Civil maintenance *	Nominal	$10,000	$10,000	$10,000
Operator costs	1 day per week per pump station, $141,000 operator salary	$28,200	$56,400	$56,400
Mechanical maintenance consumables	Nominal	$5,000	$5,000	$5,000
Cleaning (bi-annual septic tank truck visit per pump station, includes disposal)	$300/hr, 5 hours per visit, 2 visits per year per pump station	$3,000	$6,000	$6,000
Operations management	75% of Operator costs	$21,200	$42,300	$42,300

OPEX Cost Item	Cost Basis	Option 2a	Option 2b	Option 2c
Specialist labour for critical repairs **	Assume 2 visits per year	$1,000	$1,000	$1,000
Pump servicing (including labour)	Parts costs provided by suppliers, labour is assumed 24 hrs over the 30-year period at $100hr	$4,000	$7,900	$15,100
Pump renewals (including labour)	Pump costs provided by suppliers, labour is 10% of pump costs	$4,100	$4,900	$4,300
Macerator servicing (including labour)	Parts costs provided by suppliers, labour is assumed 24 hrs over the 30-year period at $100hr	$1,500	$3,000	-
Macerator renewals (including labour)	Macerator costs provided by suppliers, labour is 10% of macerator costs	$2,200	$4,400	-
Electrical renewals	1% of: pump station CAPEX (excluding pumps and macerators, including 10% P&G and 5% margin)	$5,200	$10,400	$10,400
Civil renewals	1.25% of: pipeline costs and pump station costs (excluding pumps and macerators, including 10% P&G and 5% margin)	$43,500	$45,900	$48,000
	Total	**$0.14M**	**$0.22M**	**$0.22M**

*Starts after three years following construction
**Starts after one year following construction

Power costs vary over the NPV analysis period due to the provision for population growth. The ranges of power costs (ignoring inflation and discount rates) for each option are shown in Table 5.

Table 5 OPEX Power Costs (Excl. GST)

	Option 2a	Option 2b	Option 2c
Range of power costs	$4,500 - $5,200	$5,100 - $6,000	$7,600 - $8,800

3.3 Exclusions

No provision has been made in the OPEX cost estimates for the following:

- Insurance.
- Central overheads.
- Rates.
- Compliance fees.
- GST.
- Legal costs.
- Increased costs due to currency fluctuations. The estimate currency is $NZ.

- Staffing and training.

4 NPV Analysis Results

The period for the NPV analysis is 30 years. A 20% contingency has also been applied to the annual OPEX costs used in the NPV analysis.

Option 2a has the lowest NPV compared to the other two options. The NPV analysis results are presented in Table 6.

Table 6 NPV Analysis Results (Excl. GST)

	Option 2a	Option 2b	Option 2c
CAPEX 2019 $	$5.85M	$6.15M	$6.31M
CAPEX PV $	$5.85M	$6.15M	$6.31M
Annual OPEX Year 1	$0.16M	$0.25M	$0.25M
OPEX PV	$3.58M	$5.53M	$5.61M
Total NPV (CAPEX & OPEX 30 Year)	**$9.43M**	**$11.68M**	**$11.92M**

5 Conclusion and Recommendations

Pumping option 2a (Tiffen Lane route with a single pump station and progressive cavity pumps and a PE100 DN200 PN25 pipeline) provides the lowest overall NPV over a 30-year period at $9.43M. The next two options are approximately $2M higher in NPV. As such, option 2a is recommended to be progressed as the preferred pumping configuration for the rising main.

Yours sincerely,

Rachael Shaw
Technical Director – Wastewater

on behalf of
Beca Limited
Direct Dial: +64 4 460 1779
Email: rachael.shaw@beca.com

D

Appendix D – Detailed Design Drawings

LOCALITY PLAN - STAGE 1
SCALE: NTS

DRAWING LIST		CHAINAGE
3255239-CA-0001	DRAWING LIST AND LOCALITY PLAN	
3255239-CA-0002	KEY PLAN AND GENERAL NOTES	
3255239-CA-1001	PLAN AND LONG SECTION SHEET 1 OF 17	0 TO 320
3255239-CA-1002	PLAN AND LONG SECTION SHEET 2 OF 17	320 TO 640
3255239-CA-1003	PLAN AND LONG SECTION SHEET 3 OF 17	640 TO 960
3255239-CA-1004	PLAN AND LONG SECTION SHEET 4 OF 17	960 TO 1280
3255239-CA-1005	PLAN AND LONG SECTION SHEET 5 OF 17	1280 TO 1600
3255239-CA-1006	PLAN AND LONG SECTION SHEET 6 OF 17	1600 TO 1920
3255239-CA-1007	PLAN AND LONG SECTION SHEET 7 OF 17	1920 TO 2240
3255239-CA-1008	PLAN AND LONG SECTION SHEET 8 OF 17	2240 TO 2560
3255239-CA-1009	PLAN AND LONG SECTION SHEET 9 OF 17	2560 TO 2880
3255239-CA-1010	PLAN AND LONG SECTION SHEET 10 OF 17	2880 TO 3200
3255239-CA-1011	PLAN AND LONG SECTION SHEET 11 OF 17	3200 TO 3520
3255239-CA-1012	PLAN AND LONG SECTION SHEET 12 OF 17	3520 TO 3840
3255239-CA-1013	PLAN AND LONG SECTION SHEET 13 OF 17	3840 TO 4160
3255239-CA-1014	PLAN AND LONG SECTION SHEET 14 OF 17	4160 TO 4480
3255239-CA-1015	PLAN AND LONG SECTION SHEET 15 OF 17	4480 TO 4800
3255239-CA-1016	PLAN AND LONG SECTION SHEET 16 OF 17	4800 TO 5120
3255239-CA-1017	PLAN AND LONG SECTION SHEET 17 OF 17	5120 TO 5211.75
3255239-CA-2001	AIR VALVE DETAILS	
3255239-CA-2002	SCOUR DETAILS	
3255239-CA-2003	TRENCH DETAILS AND CONNECTION DETAILS	

REFERENCE STANDARD DRAWINGS	
NZAS 4404:2010 CM-001	EMBEDMENT AND TRENCH FILL TYPICAL ARRANGEMENT
NZAS 4404:2010 CM-001	STANDARD EMBEDMENT FLEXIBLE AND RIGID PIPES
NZAS 4404:2010 CM-001	BULKHEADS AND TRENCH STOP STANDARD DETAILS
MRWA-W-302	VALVE SURFACE ARRANGEMENTS TRAFFICABLE AND NON TRAFFICABLE AREAS
MRWA-W-307	SCOUR ARRANGEMENTS FOR ≥ DN300 MAINS

Beca

Project No 3255239

OTANE TO WAIPAWA WASTEWATER RISING MAIN DETAILED DESIGN (STAGE 1)

DRAWING LIST AND LOCALITY PLAN

Prepared for

CENTRAL HAWKE'S BAY DISTRICT COUNCIL

By
Beca Ltd

10 OCTOBER 2019

ORIGINAL DRAWING IN COLOUR

FOR TENDER
NOT FOR CONSTRUCTION

Drawing No.	Rev.
3255239-CA-0001	T0

www.beca.com

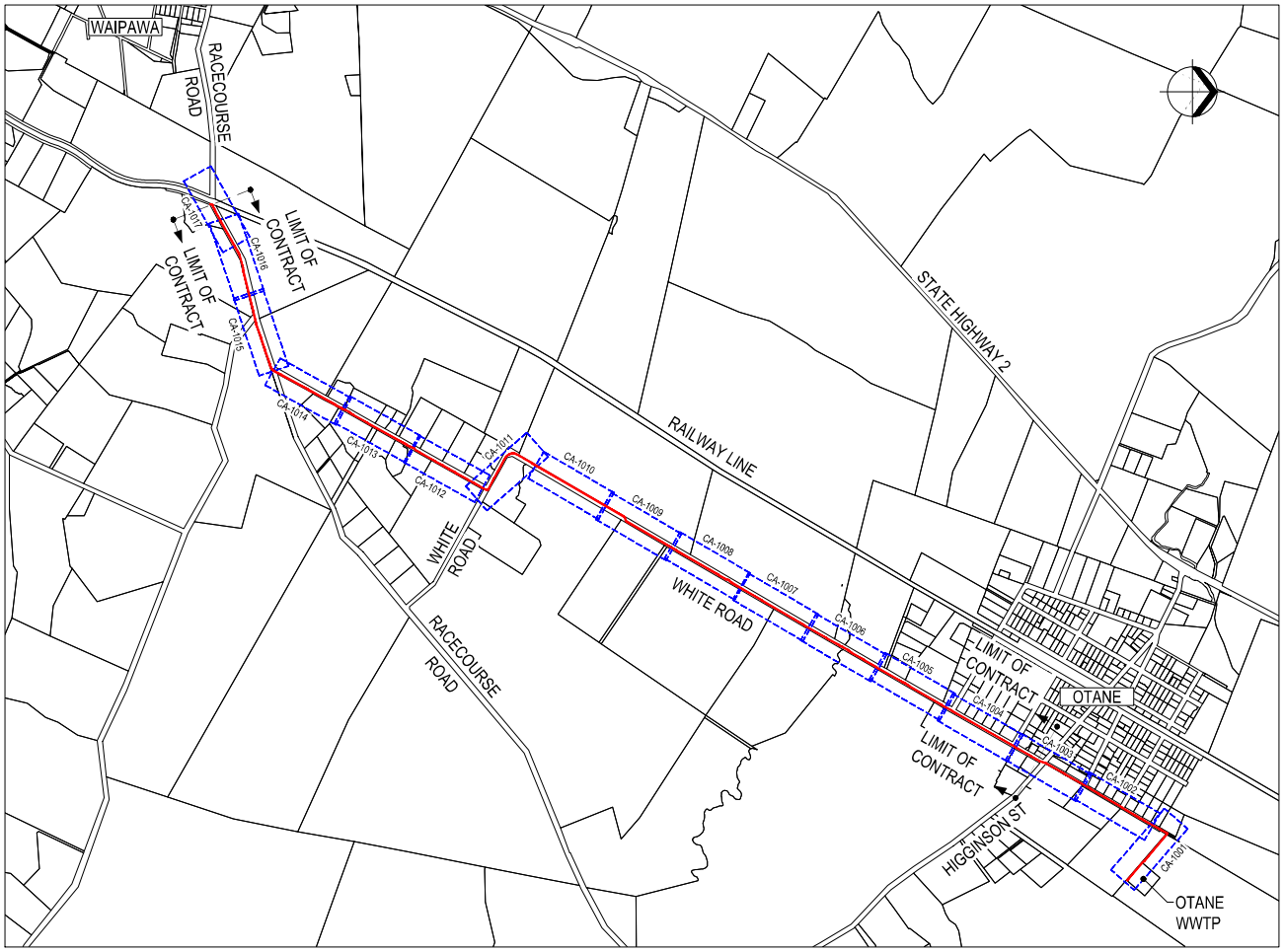

KEY PLAN - STAGE 1

SCALE: 1:10000

SERVICES LEGEND

- PROPOSED WASTE WATER
- SS — EXISTING SANITARY SEWER
- SW — SW — EXISTING STORMWATER
- W — EXISTING WATER MAIN
- X — X — X — ABANDONED WATERMAIN
- PARCEL BOUNDARY
- EXCLUSION ZONE
- WATER SUPPLY VALVE
- SCOUR VALVE
- AIR VALVE
- SHEET LIMIT

UTILITIES LEGEND

- T — CHORUS
- UP — U/G POWER
- OP — O/H POWER
- POWER POLE

HAZARD WARNINGS

A! EXISTING SANITARY SEWER/MANHOLE IN CLOSE PROXIMITY/CROSSING TO PROPOSED WORKS. CONTRACTOR TO MAINTAIN MINIMUM CLEARANCE BETWEEN UTILITIES.

B! EXISTING OVERHEAD POWER LINE IN PROXIMITY TO PROPOSED WORKS. POWER POLES TO BE IDENTIFIED PRIOR TO CONSTRUCTION. WARNING OF OPERATION WITH HEAVY MACHINERY FOR CONTACT WITH LIVE OVERHEAD LINES.

C! EXISTING WATER MAIN IN CLOSE PROXIMITY/CROSSING TO PROPOSED WORKS. CONTRACTOR TO MAINTAIN MINIMUM CLEARANCE BETWEEN UTILITIES.

D! EXISTING STORM WATER LINE/CULVERT IN CLOSE PROXIMITY/CROSSING TO PROPOSED WORKS. CONTRACTOR TO MAINTAIN MINIMUM CLEARANCE BETWEEN UTILITIES.

E! EXISTING TELECOMMUNICATION CABLE IN CLOSE PROXIMITY/CROSSING TO PROPOSED WORKS. CONTRACTOR TO MAINTAIN MINIMUM CLEARANCE BETWEEN UTILITIES.

F! EXISTING UNDERGROUND ELECTRIC CABLE IN CLOSE PROXIMITY/CROSSING TO PROPOSED WORKS. CONTRACTOR TO MAINTAIN MINIMUM CLEARANCE BETWEEN UTILITIES.

G! TREES AND ASSOCIATED IRRIGATION LINE IN CLOSE PROXIMITY WITH PROPOSED WORKS. CARE SHOULD BE TAKEN TO AVOID ANY DAMAGE TO TREES AND IRRIGATION LINES.

H! EXISTING ASBESTOS CEMENT (AC) WATER MAIN IN CLOSE PROXIMITY/CROSSING TO PROPOSED WORKS. CONTRACTOR TO MAINTAIN MINIMUM CLEARANCE BETWEEN UTILITIES.

GENERAL NOTES

1. COORDINATES FOR SETTING OUT ARE TO NEW ZEALAND TRANSVERSE MERCATOR (NZTM) 2000.
2. LEVELS ARE DERIVED FROM CENTRAL HAWKE'S BAY LIDAR DATA AND TRANSPOSED TO NEW ZEALAND VERTICAL DATUM (NZVD) 2016
3. ALL CONSTRUCTION WORKS TO BE IN ACCORDANCE WITH NZS 4404:2010.
4. UNLESS OTHERWISE NOTED, EXISTING SERVICES LOCATIONS HAVE BEEN SOURCED FROM DIAL BEFORE YOU DIG DATA AND ARE LIKELY TO BE INCOMPLETE AND INACCURATE.
5. CONTRACTOR TO CONFIRM THE LOCATION AND DEPTH OF ALL EXISTING SERVICES. ALL EXISTING SERVICES SHALL BE PHYSICALLY LOCATED PRIOR TO CONSTRUCTION. CONFLICTS OR INSUFFICIENT CLEARANCE SHALL BE REFERRED TO THE DESIGNER.
6. ALL INVERT LEVELS OF EXISTING UTILITIES SHOWN IN THE DRAWINGS ARE ASSUMED AND TO BE CONFIRMED PRIOR TO PROCEED WITH THE WORKS.
7. MINIMUM CLEARANCES FROM EXISTING SERVICES ARE TO BE MAINTAINED IN ACCORDANCE WITH SECTION 5.3.7.9 NZS 4404:2010.
8. ALL PIPES TO BE INSTALLED IN OPEN TRENCHES.
9. VEHICLES ASSOCIATED WITH THE WORKS SHALL NOT DEPOSIT DIRT OR RUBBISH ONTO ROADS. ANY MATERIAL DEPOSITED SHALL BE PROMPTLY CLEANED UP WITHOUT CONTAMINATING ANY WATERWAY.
10. EXISTING FOOTPATH, KERB AND CHANNEL, PAVEMENT, NATURE STRIP, LANDSCAPE MOUNDING AND FENCE AFFECTED BY THE WORKS ARE TO BE REINSTATED IN ACCORDANCE WITH THE RELEVANT ROAD AUTHORITY SPECIFICATION.
11. MINIMUM COVER BELOW FINISHED SURFACE:
    -850MM UNDER NON TRAFFICABLE AREAS
    -850MM UNDER ROAD BERM AND FOOTPATH
    -900MM UNDER TRAFFICABLE AREAS SUCH AS SEALED AND UN-SEALED CARRIAGEWAYS
12. COMPACTION TEST RESULTS ON TRENCH BACKFILL MUST BE PROVIDED TO THE CLIENT'S REPRESENTATIVE IN ACCORDANCE WITH SPECIFICATIONS.
13. PIPELINE TRENCH AND EMBEDMENT SHALL BE AS PER NZS 4404:2010 DRAWINGS CM-01 AND CM-02.
14. WHERE REQUIRED, CONSTRUCT BULKHEAD ADJACENT TO KERB AND GUTTER SHOULDER OF SEALED ROAD IN ACCORDANCE WITH NZS 4404:2010 DRAWING CM-003.
15. CONTRACTOR TO CARRY OUT ALL ACCEPTANCE TESTING PROCEDURES AS PER NZS 4404:2010.
16. ALL BURIED FLANGE CONNECTIONS SHALL BE PROTECTED BY MASTIC FILLER, PETROLATUM TAPE AND POLYETHYLENE SLEEVING.
17. MINIMUM BENDING RADIUS FOR PIPE IS 33xOD.
18. CHANGES IN VERTICAL DIRECTION TO BE ACHIEVED BY PIPE BENDING.
19. ALL BOLTS AND NUTS/FASTENERS SHALL BE MADE OF STAINLESS STEEL.
20. PIPELINE FROM CHAINAGE 0.00 TO 850.00 TO BE CONSTRUCTED BY OTHERS.
21. SUPPLY AND INSTALLATION OF DN80 AIR VALVES ARE NOT PART OF THIS CONTRACT.

ORIGINAL DRAWING IN COLOUR

FOR TENDER
NOT FOR CONSTRUCTION

No.	Revision	By	Chk	Apprd	Date
T0	FOR TENDER	JA	PA	MF	10.10.19

Drawing Originator: Beca

Original Scale (A1) 1:10000	Design	JA	10.10.19
Reduced Scale (A3) 1:20000	Drawn	PTS	10.10.19
	Verifier	PA	10.10.19
	Dwg Check	AS	10.10.19

Approved For Construction* Date
* Refer to Revision 1 for Original Signature

Client: CENTRAL HAWKE'S BAY DISTRICT COUNCIL

Project: OTANE TO WAIPAWA WASTEWATER RISING MAIN

Title: KEY PLAN AND GENERAL NOTES

Discipline: CIVIL

Drawing No. 3255239-CA-0002 Rev. T0

DO NOT SCALE

IF IN DOUBT ASK.

www.beca.com

Document No. 3255239-CA-0002.DWG

Drawing Plotted: 10 Oct 2019 2:48 p.m.

NOTES

1. FOR GENERAL NOTES, LEGENDS AND HAZARD WARNINGS REFER TO DRAWING 3255239-CA-0002.
2. FOR AIR VALVE DETAILS, REFER TO 3255239-CA-2001.
3. FOR SCOUR DETAILS, REFER TO 3255239-CA-2002.
4. FOR TRENCH DETAILS, REFER TO 3255239-CA-2003.
5. ALL INVERT LEVELS FOR EXISTING UTILITIES ARE ASSUMED AND TO BE CONFIRMED AT SITE.
6. PIPELINE SECTION NOT PART OF THIS CONTRACT.
7. PIPE ROUTE AND DEPTH TO BE DESIGNED ALONG SIDE THE DESIGN OF FUTURE OTANE PUMP STATION.

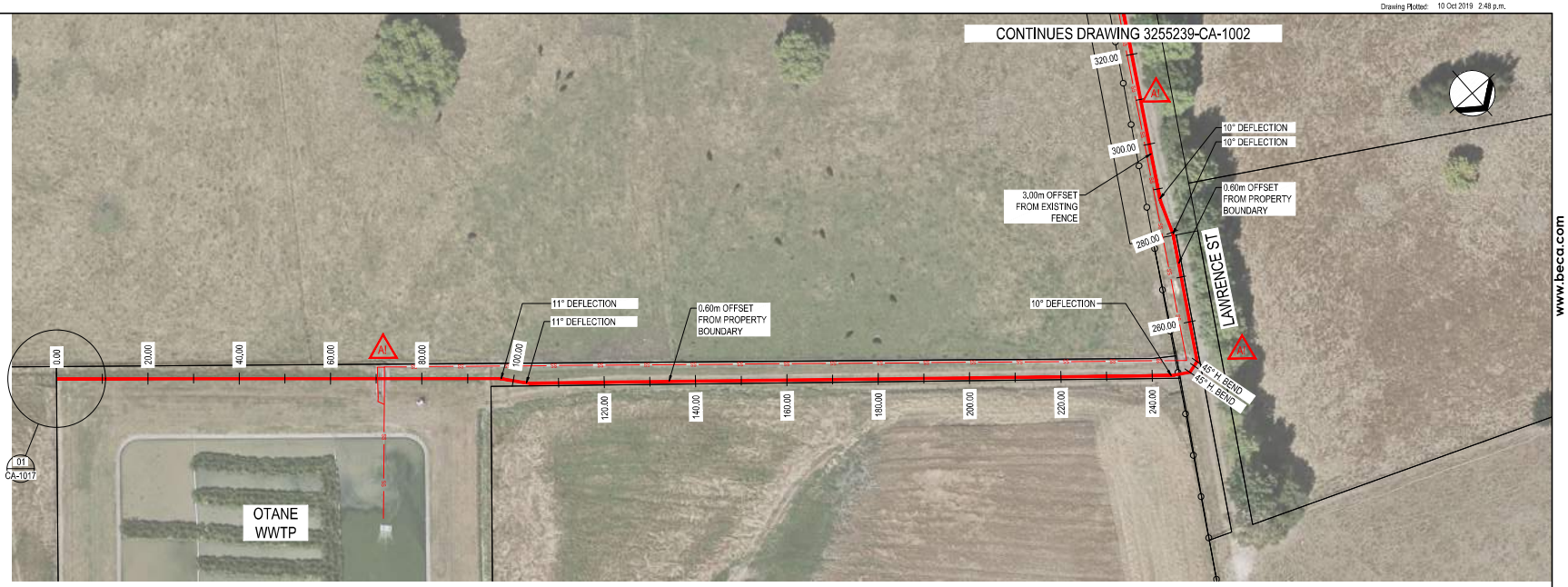

PLAN

SCALE 1:500

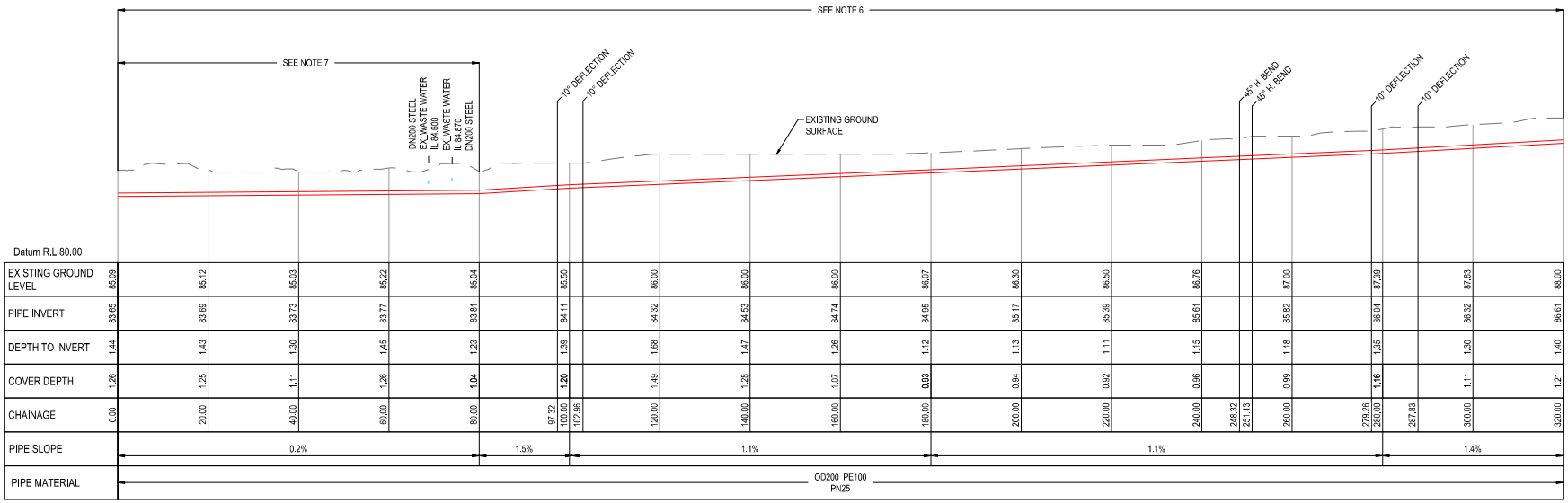

EXISTING GROUND LEVEL	85.69	85.12	85.03	85.22	85.04	85.50	86.00	86.00	86.00	86.07	86.30	86.50	86.76	87.00	87.39	87.63	88.00
PIPE INVERT	83.65	83.69	83.73	83.77	83.81	84.11	84.32	84.53	84.74	84.95	85.17	85.39	85.61	85.82	86.04	86.32	86.61
DEPTH TO INVERT	1.44	1.43	1.30	1.45	1.23	1.39	1.68	1.47	1.26	1.12	1.13	1.11	1.15	1.18	1.35	1.30	1.40
COVER DEPTH	1.26	1.25	1.11	1.26	1.04	1.20	1.49	1.28	1.07	0.93	0.94	0.92	0.96	0.99	1.16	1.11	1.21
CHAINAGE	0.00	20.00	40.00	60.00	80.00	97.32 / 100.00	102.96	120.00	140.00	160.00	180.00	200.00	220.00	240.00	248.32 / 251.13	260.00	278.26 / 280.00	287.83	300.00	320.00
PIPE SLOPE	0.2%				1.5%	1.1%					1.1%						1.4%			

LONGITUDINAL SECTION

SCALE HORIZONTAL 1:500
VERTICAL SCALE 1:125

ORIGINAL DRAWING IN COLOUR

FOR TENDER
NOT FOR CONSTRUCTION

No.	Revision	By	Chk	Appd	Date
T0	FOR TENDER	JA	PA	MF	10.10.19

Drawing Originator: Beca

Original Scale (A1) AS SHOWN	Design	JA	10.10.19	Approved For Construction*
	Drawn	PTS	10.10.19	
Reduced Scale (A3) AS SHOWN	Verifier	PA	10.10.19	
	Dwg Check	AS	10.10.19	Date

* Refer to Revision 1 for Original Signature

Client: CENTRAL HAWKE'S BAY DISTRICT COUNCIL

Project: OTANE TO WAIPAWA WASTEWATER RISING MAIN

Title: PLAN AND LONG SECTION SHEET 01 OF 17

Discipline: CIVIL

Drawing No.: 3255239-CA-1001 Rev. T0

DO NOT SCALE

IF IN DOUBT ASK.

www.beca.com

Document No. 3255239-CA-1001.DWG

Drawing Plotted: 10 Oct 2019 2:48 p.m.

NOTES

1. FOR GENERAL NOTES, LEGENDS AND HAZARD WARNINGS REFER TO DRAWING 3255239-CA-0002.
2. FOR AIR VALVE DETAILS, REFER TO 3255239-CA-2001.
3. FOR SCOUR DETAILS, REFER TO 3255239-CA-2002.
4. FOR TRENCH DETAILS, REFER TO 3255239-CA-2003.
5. ALL INVERT LEVELS OF EXISTING UTILITIES ARE ASSUMED AND TO BE CONFIRMED AT SITE.
6. PIPELINE SECTION NOT PART OF THIS CONTRACT.

PLAN
SCALE 1:500

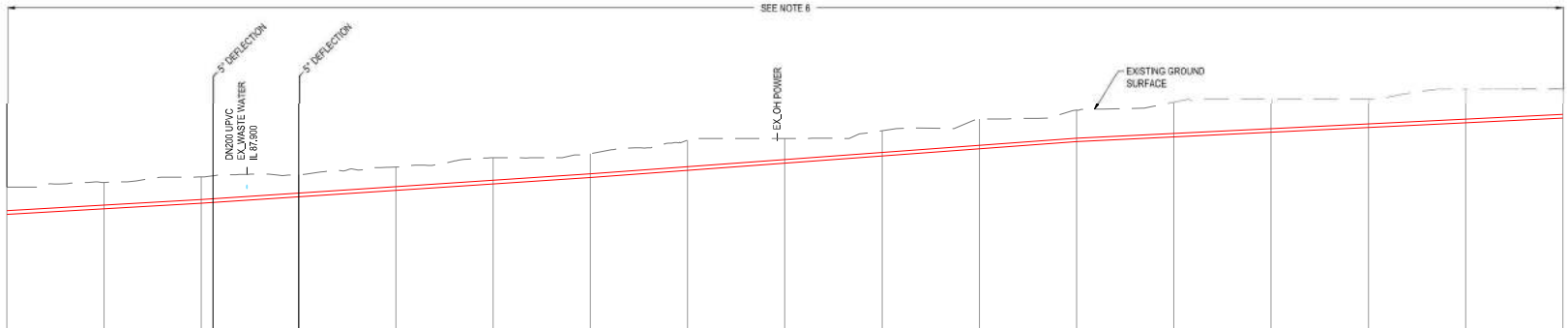

Datum R.L 80.00

EXISTING GROUND LEVEL	88.00	88.24	88.53	88.64	89.03	89.50	89.72	90.42	90.50	90.89	91.50	91.95	92.35	92.50	92.50	93.00	93.00	
PIPE INVERT	86.61	86.89	87.17	87.50	87.83	88.16	88.49	88.86	89.23	89.59	89.96	90.33	90.57	90.82	91.06	91.31	91.55	
DEPTH TO INVERT	1.40	1.35	1.36	1.14	1.20	1.34	1.23	1.56	1.27	1.30	1.54	1.62	1.78	1.88	1.44	1.69	1.45	
COVER DEPTH	1.21	1.16	**1.17**	0.95	1.02	1.15	**1.04**	1.37	1.09	1.11	1.35	**1.43**	1.59	1.49	1.25	1.50	1.26	
CHAINAGE	320.00	340.00	380.00	362.39	380.00	400.00	420.00	440.00	460.00	480.00	500.00	520.00	540.00	560.00	580.00	600.00	620.00	640.00
PIPE SLOPE	1.4%			1.7%				1.8%					1.2%					
PIPE MATERIAL	OD200 PE100 PN25																	

LONGITUDINAL SECTION
SCALE HORIZONTAL 1:500
VERTICAL SCALE 1:125

ORIGINAL DRAWING IN COLOUR

FOR TENDER
NOT FOR CONSTRUCTION

No.	Revision	By	Chk	Appd	Date
T0	FOR TENDER	JA	PA	MF	10.10.19

Drawing Originator: Beca

Original Scale (A1) AS SHOWN	Design	JA	10.10.19
	Drawn	PTS	10.10.19
Reduced Scale (A3) AS SHOWN	Verifier	PA	10.10.19
	Dwg Check	AS	10.10.19

Approved For Construction* Date
* Refer to Revision 1 for Original Signature

Client: CENTRAL HAWKE'S BAY DISTRICT COUNCIL

Project: OTANE TO WAIPAWA WASTEWATER RISING MAIN

Title: PLAN AND LONG SECTION SHEET 02 OF 17

Discipline: CIVIL

Drawing No.: 3255239-CA-1002 Rev.: T0

DO NOT SCALE

IF IN DOUBT ASK.

www.beca.com

Document No. 3255239-CA-1002.DWG

Drawing Plotted: 10 Oct 2019 2:48 p.m.

NOTES

1. FOR GENERAL NOTES, LEGENDS AND HAZARD WARNINGS REFER TO DRAWING 3255239-CA-0002.
2. FOR AIR VALVE DETAILS, REFER TO 3255239-CA-2001.
3. FOR SCOUR DETAILS, REFER TO 3255239-CA-2002.
4. FOR TRENCH DETAILS, REFER TO 3255239-CA-2003.
5. ALL INVERT LEVELS OF EXISTING UTILITIES ARE ASSUMED AND TO BE CONFIRMED AT SITE.
6. PIPELINE SECTION NOT PART OF THIS CONTRACT.

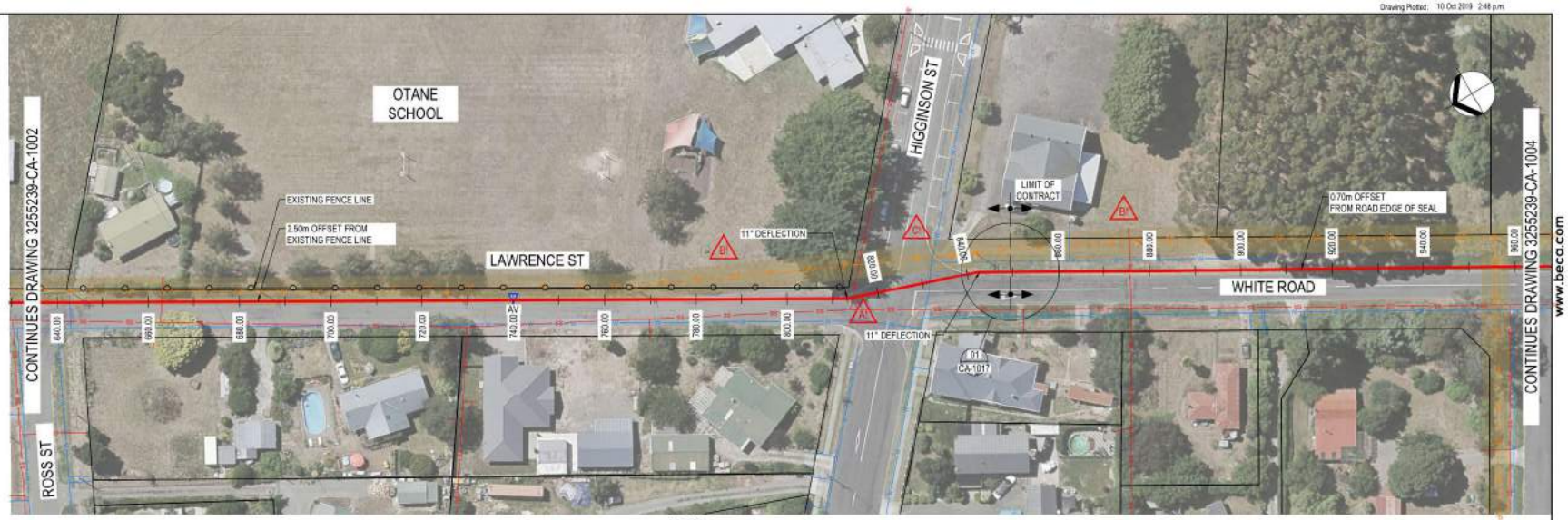

PLAN
SCALE 1:500

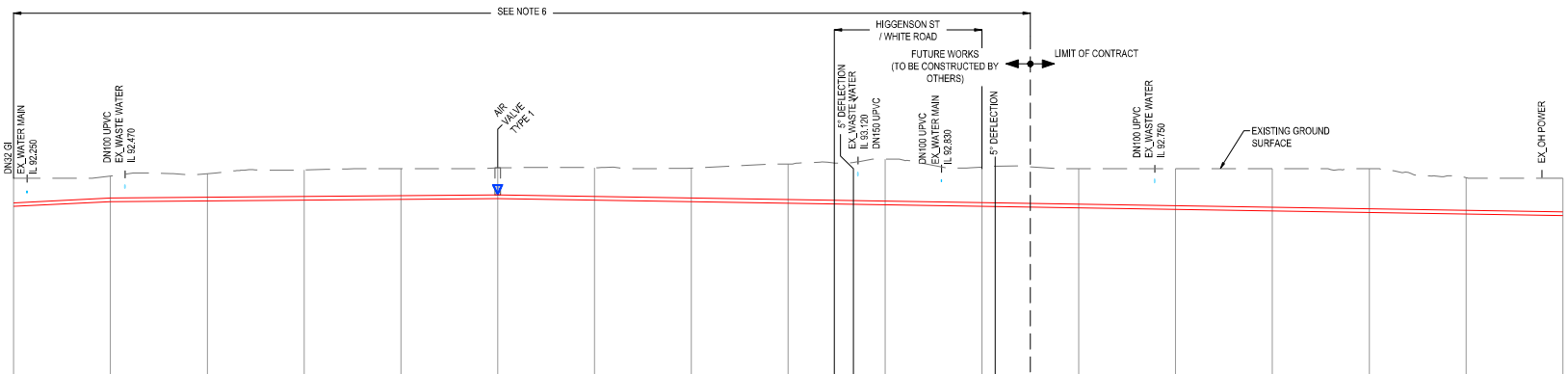

Datum R.L 82.00

EXISTING GROUND LEVEL	93.00		93.12		93.24		93.44		93.50		93.55		93.55		93.53		93.75		94.00		93.59	
PIPE INVERT	91.55		91.80		91.84		91.88		91.92		91.96		91.88		91.80		91.72		91.84		91.56	
DEPTH TO INVERT	1.45		1.33		1.41		1.56		1.58		1.59		1.67		1.73		2.03		2.36		2.03	
COVER DEPTH	1.26		**1.14**		1.22		1.37		1.39		**1.40**		1.48		1.54		1.84		2.17		**1.84**	
CHAINAGE	640.00		660.00		680.00		700.00		720.00		740.00		760.00		780.00		800.00	810.00	813.47	820.00	840.00	842.74
PIPE SLOPE	1.2%				0.2%								-0.4%									
PIPE MATERIAL	OD200 PE100 PN25																					

EXISTING GROUND LEVEL	93.50		93.50		93.50		93.49		93.03		93.00											
PIPE INVERT	91.48		91.40		91.32		91.24		91.16		91.08											
DEPTH TO INVERT	2.02		2.10		2.18		2.26		1.88		1.92											
COVER DEPTH	1.83		1.91		1.99		2.07		1.69		**1.73**											
CHAINAGE	850.00		860.00		880.00		900.00		920.00		940.00		960.00									
PIPE SLOPE					-0.4%																	
PIPE MATERIAL																						

LONGITUDINAL SECTION
SCALE HORIZONTAL 1:500
VERTICAL SCALE 1:125

ORIGINAL DRAWING IN COLOUR

FOR TENDER
NOT FOR CONSTRUCTION

No.	Revision	By	Chk	Appd	Date
T0	FOR TENDER	JA	PA	MF	10.10.19

Drawing Originator: Beca

Original Scale (A1) AS SHOWN	Design	JA	10.10.19
	Drawn	PTS	10.10.19
Reduced Scale (A3) AS SHOWN	Verifier	PA	10.10.19
	Dwg Check	AS	10.10.19

Approved For Construction* Date
* Refer to Revision 1 for Original Signature

Client: CENTRAL HAWKE'S BAY DISTRICT COUNCIL

Project: OTANE TO WAIPAWA WASTEWATER RISING MAIN

Title: PLAN AND LONG SECTION SHEET 03 OF 17

Discipline: CIVIL

Drawing No.: 3255239-CA-1003 Rev.: T0

DO NOT SCALE

IF IN DOUBT ASK.

www.beca.com

Document No.: 3255239-CA-1003.DWG

Drawing Plotted: 10 Oct 2019 2:47 p.m.

NOTES

1. FOR GENERAL NOTES, LEGENDS AND HAZARD WARNINGS REFER TO DRAWING 3255239-CA-0002.
2. FOR AIR VALVE DETAILS, REFER TO 3255239-CA-2001.
3. FOR SCOUR DETAILS, REFER TO 3255239-CA-2002.
4. FOR TRENCH AND CULVERT CROSSING DETAILS, REFER TO 3255239-CA-2003.
5. ALL INVERT LEVELS OF EXISTING UTILITIES ARE ASSUMED AND TO BE CONFIRMED AT SITE.

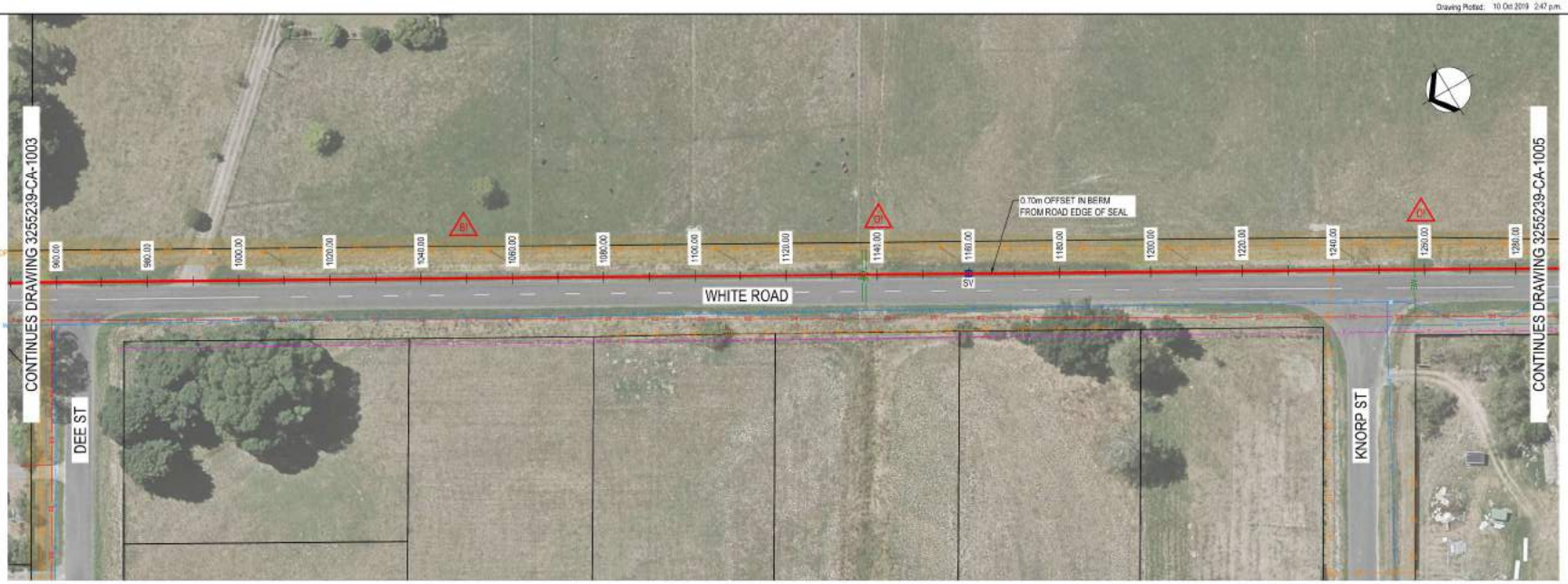

PLAN

SCALE 1:500

Datum R.L 82.00

EXISTING GROUND LEVEL	93.00		92.73			92.50		92.39		92.00		91.97		91.95		92.00		92.00		92.00		92.00		92.03		92.29		92.41		92.50		92.75		92.93
PIPE INVERT	91.08		91.00			90.92		90.84		90.76		90.67		90.59		90.51		90.43		90.35		90.26		90.45		90.64		90.84		91.03		91.22		91.51
DEPTH TO INVERT	1.92		1.74			1.58		1.56		1.24		1.29		1.36		1.49		1.57		1.65		1.74		1.57		1.65		1.58		1.47		1.54		1.42
COVER DEPTH	1.73		1.55			1.39		1.37		**1.05**		1.10		1.17		1.30		1.38		1.46		**1.55**		1.38		1.46		1.39		1.28		**1.35**		1.23
CHAINAGE	960.00		980.00	986.00	993.51	1000.00		1020.00		1040.00		1060.00		1080.00		1100.00		1120.00		1140.00		1160.00		1180.00		1200.00		1220.00		1240.00		1260.00		1280.00
PIPE SLOPE		-0.4%									-0.4%												1.0%										1.5%	
PIPE MATERIAL	OD200 PE100 PN25																																	

LONGITUDINAL SECTION

SCALE HORIZONTAL 1:500
VERTICAL SCALE 1:125

ORIGINAL DRAWING IN COLOUR

FOR TENDER
NOT FOR CONSTRUCTION

No.	Revision	By	Chk	Appd	Date
T0	FOR TENDER	JA	PA	MF	10.10.19

Drawing Originator: Beca

Original Scale (A1) AS SHOWN	Design	JA	10.10.19	Approved For Construction*
	Drawn	PTS	10.10.19	
Reduced Scale (A3) AS SHOWN	Verifier	PA	10.10.19	
	Dwg Check	AS	10.10.19	Date

* Refer to Revision 1 for Original Signature

Client: CENTRAL HAWKE'S BAY DISTRICT COUNCIL

Project: OTANE TO WAIPAWA WASTEWATER RISING MAIN

Title: PLAN AND LONG SECTION SHEET 04 OF 17

Discipline: CIVIL

Drawing No.: 3255239-CA-1004 Rev. T0

DO NOT SCALE

IF IN DOUBT ASK.

Document No. 3255239-CA-1004.DWG

www.beca.com

Drawing Plotted: 10 Oct 2019 2:47 p.m.

NOTES

1. FOR GENERAL NOTES, LEGENDS AND HAZARD WARNINGS REFER TO DRAWING 3255239-CA-0002.
2. FOR AIR VALVE DETAILS, REFER TO 3255239-CA-2001.
3. FOR SCOUR DETAILS, REFER TO 3255239-CA-2002.
4. FOR TRENCH AND CULVERT CROSSING DETAILS, REFER TO 3255239-CA-2003.
5. ALL INVERT LEVELS OF EXISTING UTILITIES ARE ASSUMED AND TO BE CONFIRMED AT SITE.

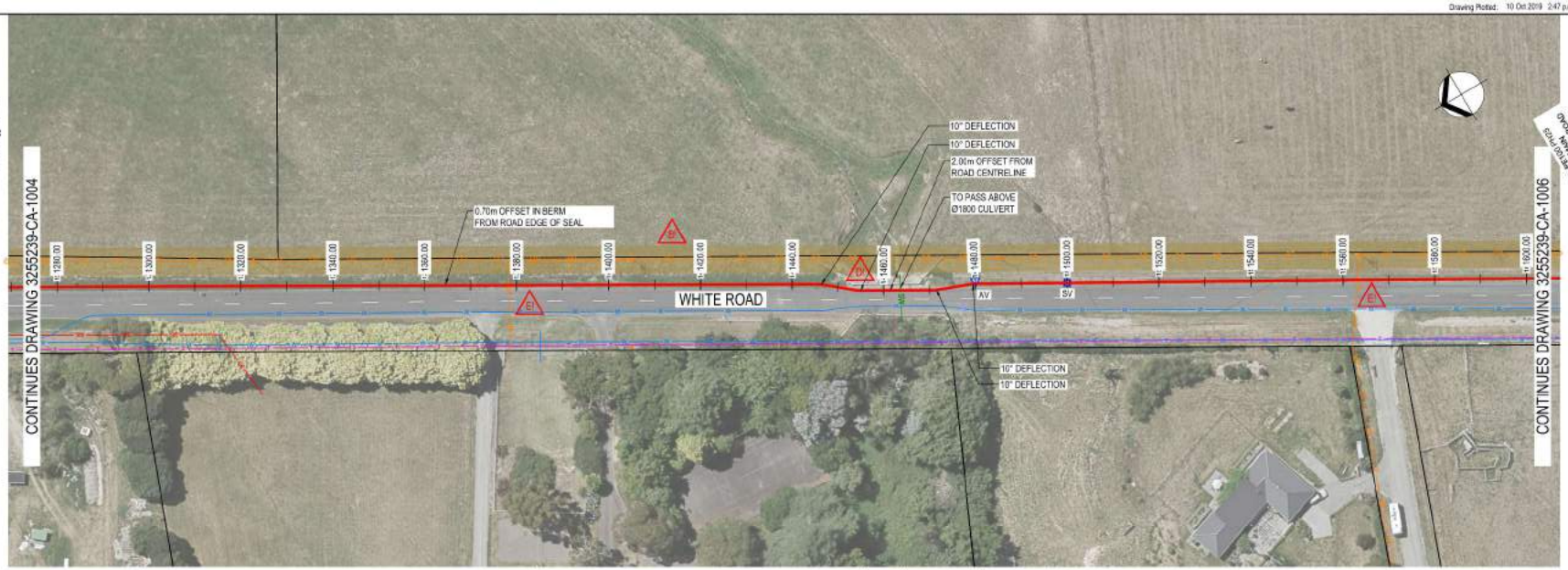

PLAN
SCALE 1:500

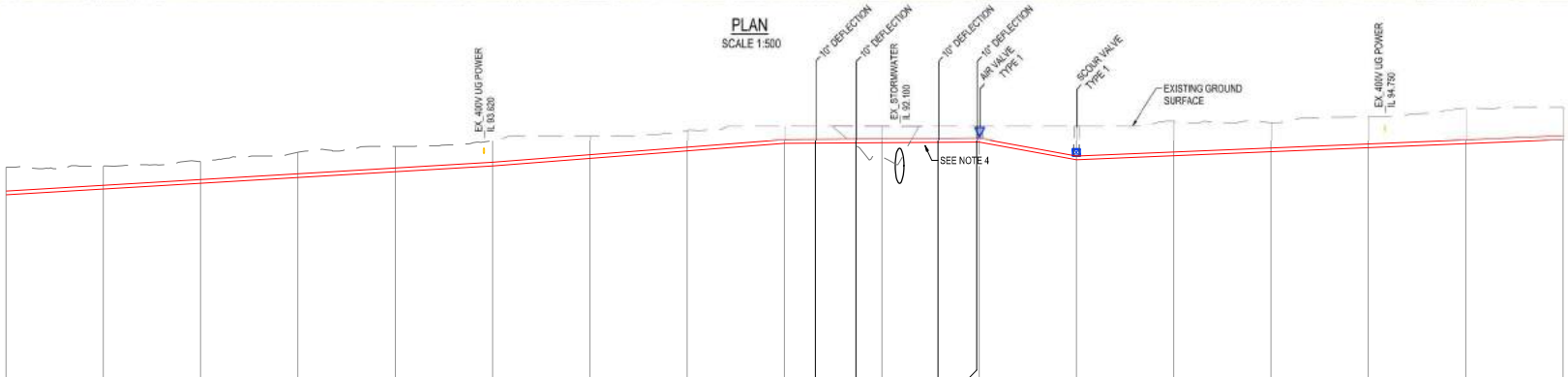

Datum R.L 82.00

EXISTING GROUND LEVEL	92.93	92.99	93.23	93.69	93.99	94.28	94.50	94.79	95.00			95.00			95.00	95.00	95.27	95.19	95.50	95.95	96.00
PIPE INVERT	91.51	91.81	92.10	92.40	92.69	92.99	93.37	93.76	94.15			94.19			94.22	93.31	93.52	93.72	93.93	94.14	94.34
DEPTH TO INVERT	1.42	1.18	1.13	1.30	1.30	1.29	1.13	1.03	0.85			0.81			0.78	1.69	1.75	1.47	1.57	1.81	1.66
COVER DEPTH	1.23	0.99	0.94	1.11	1.11	1.10	0.94	0.84	0.66			0.62			0.59	1.50	1.56	1.28	1.38	1.62	1.47
CHAINAGE	1280.00	1300.00	1320.00	1340.00	1360.00	1380.00	1400.00	1420.00	1440.00	1446.32	1454.66	1460.00	1471.52	1479.00	1480.00	1500.00	1520.00	1540.00	1560.00	1580.00	1600.00
PIPE SLOPE	1.5%						1.9%					0.2%			-4.6%	1.0%					
PIPE MATERIAL	OD200 PE100 PN25																				

LONGITUDINAL SECTION
SCALE HORIZONTAL 1:500
VERTICAL SCALE 1:125

ORIGINAL DRAWING IN COLOUR

FOR TENDER
NOT FOR CONSTRUCTION

No.	Revision	By	Chk	Appd	Date
T0	FOR TENDER	JA	PA	MF	10.10.19

Drawing Originator: Beca

Original Scale (A1) AS SHOWN	Design	JA	10.10.19
	Drawn	PTS	10.10.19
	Verifier	PA	10.10.19
Reduced Scale (A3) AS SHOWN	Dwg Check	AS	10.10.19

Approved For Construction* Date

* Refer to Revision 1 for Original Signature

DO NOT SCALE

Client: CENTRAL HAWKE'S BAY DISTRICT COUNCIL

Project: OTANE TO WAIPAWA WASTEWATER RISING MAIN

Title: PLAN AND LONG SECTION SHEET 05 OF 17

Discipline: CIVIL

Drawing No.: 3255239-CA-1005 Rev. T0

IF IN DOUBT ASK.

Document No. 3255239-CA-1005.DWG

www.beca.com

www.beca.com

Drawing Plotted: 10 Oct 2019 2:47 p.m.

NOTES

1. FOR GENERAL NOTES, LEGENDS AND HAZARD WARNINGS REFER TO DRAWING 3255239-CA-0002.
2. FOR AIR VALVE DETAILS, REFER TO 3255239-CA-2001.
3. FOR SCOUR DETAILS, REFER TO 3255239-CA-2002.
4. FOR TRENCH AND CULVERT CROSSING DETAILS, REFER TO 3255239-CA-2003.
5. ALL INVERT LEVELS OF EXISTING UTILITIES ARE ASSUMED AND TO BE CONFIRMED AT SITE.

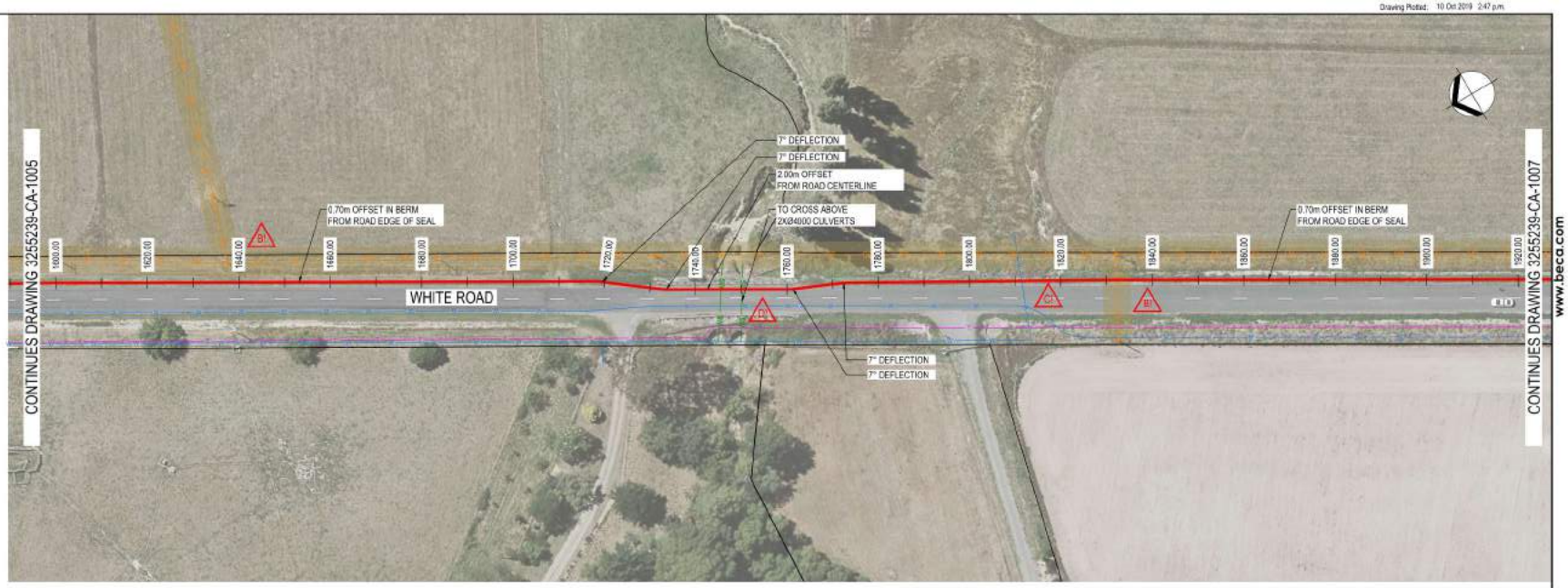

PLAN
SCALE 1:500

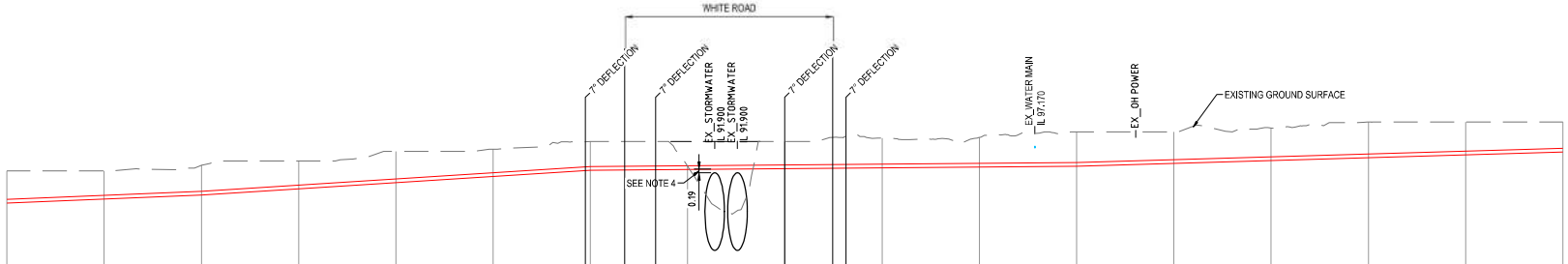

Datum R.L 90.00

EXISTING GROUND LEVEL	96.00	96.00	96.27	96.50	97.00	97.11	97.50		97.50	97.50		97.68	97.72	98.00	98.00	98.19	98.50	98.50	98.50
PIPE INVERT	94.34	94.55	94.75	95.07	95.39	95.71	96.02		96.07	96.11		96.15	96.19	96.23	96.38	96.53	96.67	96.82	96.97
DEPTH TO INVERT	1.66	1.45	1.52	1.43	1.61	1.41	1.48		1.43	1.39		1.53	1.53	1.77	1.62	1.67	1.83	1.68	1.53
COVER DEPTH	1.47	1.26	1.33	1.24	1.42	1.22	1.29		1.24	1.20		1.34	1.34	1.58	1.43	1.48	1.64	1.49	1.35
CHAINAGE	1600.00	1620.00	1640.00	1660.00	1680.00	1700.00	1719.00	1720.00	1726.89	1733.44	1740.00	1760.00	1761.00	1769.83	1772.56	1780.00	1800.00	1820.00	1840.00	1860.00	1880.00	1900.00	1920.00
PIPE SLOPE	1.0%			1.6%				0.2%											0.7%				
PIPE MATERIAL	OD200 PE100 PN25																						

LONGITUDINAL SECTION
SCALE HORIZONTAL 1:500
VERTICAL SCALE 1:125

ORIGINAL DRAWING IN COLOUR

FOR TENDER
NOT FOR CONSTRUCTION

No.	Revision	By	Chk	Appd	Date
T0	FOR TENDER	JA	PA	MIF	10.10.19

Drawing Originator: Beca

Original Scale (A1) AS SHOWN	Design	JA	10.10.19
	Drawn	PTS	10.10.19
Reduced Scale (A3) AS SHOWN	Verifier	PA	10.10.19
	Dwg Check	AS	10.10.19

Approved For Construction* Date

* Refer to Revision 1 for Original Signature

Client: CENTRAL HAWKE'S BAY DISTRICT COUNCIL

Project: OTANE TO WAIPAWA WASTEWATER RISING MAIN

Title: PLAN AND LONG SECTION SHEET 06 OF 17

Discipline: CIVIL

Drawing No.: 3255239-CA-1006 Rev. T0

DO NOT SCALE

IF IN DOUBT ASK.

www.beca.com

Document No. 3255239-CA-1006.DWG

Drawing Plotted: 10 Oct 2019 2:47 p.m.

NOTES

1. FOR GENERAL NOTES, LEGENDS AND HAZARD WARNINGS REFER TO DRAWING 3255239-CA-0002.
2. FOR AIR VALVE DETAILS, REFER TO 3255239-CA-2001.
3. FOR SCOUR DETAILS, REFER TO 3255239-CA-2002.
4. FOR TRENCH AND CULVERT CROSSING DETAILS, REFER TO 3255239-CA-2003.
5. ALL INVERT LEVELS OF EXISTING UTILITIES ARE ASSUMED AND TO BE CONFIRMED AT SITE.

PLAN
SCALE 1:500

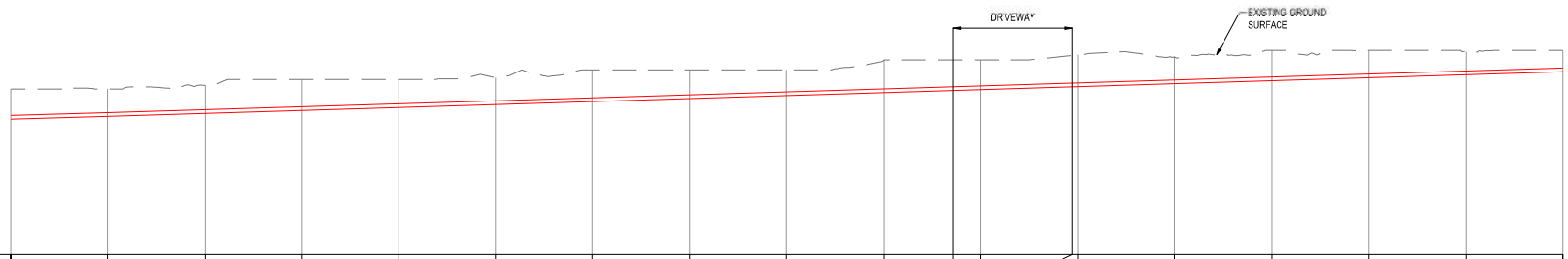

Datum R.L 90.00

EXISTING GROUND LEVEL	98.50	98.50	98.89	99.00	99.00	99.10	99.50	99.50	99.50	100.00		100.00		100.27	100.16	100.49	100.49	100.43	100.50
PIPE INVERT	96.97	97.11	97.26	97.41	97.56	97.71	97.87	98.02	98.17	98.32		98.48		98.63	98.78	98.94	99.09	99.24	99.39
DEPTH TO INVERT	1.53	1.39	1.43	1.59	1.44	1.39	1.63	1.48	1.33	1.68		1.52		1.64	1.38	1.56	1.40	1.19	1.11
COVER DEPTH	1.35	1.20	1.24	1.40	1.25	1.20	1.44	1.29	1.14	1.49		1.33		1.45	1.19	1.37	1.21	1.00	0.92
CHAINAGE	1920.00	1940.00	1960.00	1980.00	2000.00	2020.00	2040.00	2060.00	2080.00	2100.00	2114.38	2120.00	2137.03	2140.00	2160.00	2180.00	2200.00	2220.00	2240.00
PIPE SLOPE	0.7%	0.8%					0.8%												
PIPE MATERIAL	OD200 PE100 PN25																		

LONGITUDINAL SECTION
SCALE HORIZONTAL 1:500
VERTICAL SCALE 1:125

ORIGINAL DRAWING IN COLOUR

FOR TENDER
NOT FOR CONSTRUCTION

No.	Revision	By	Chk	Appd	Date
T0	FOR TENDER	JA	PA	MF	10.10.19

Drawing Originator: Beca

Original Scale (A1) AS SHOWN	Design	JA	10.10.19
	Drawn	PTS	10.10.19
Reduced Scale (A3) AS SHOWN	Verifier	PA	10.10.19
	Dwg Check	AS	10.10.19

Approved For Construction* Date

* Refer to Revision 1 for Original Signature

Client: CENTRAL HAWKE'S BAY DISTRICT COUNCIL

Project: OTANE TO WAIPAWA WASTEWATER RISING MAIN

Title: PLAN AND LONG SECTION SHEET 07 OF 17

Discipline: CIVIL

Drawing No.: 3255239-CA-1007 Rev.: T0

DO NOT SCALE

IF IN DOUBT ASK.

www.beca.com

Document No. 3255239-CA-1007.DWG

Drawing Plotted: 10 Oct 2019 2:46 p.m.

NOTES

1. FOR GENERAL NOTES, LEGENDS AND HAZARD WARNINGS REFER TO DRAWING 3255239-CA-0002.
2. FOR AIR VALVE DETAILS, REFER TO 3255239-CA-2001.
3. FOR SCOUR DETAILS, REFER TO 3255239-CA-2002.
4. FOR TRENCH AND CULVERT CROSSING DETAILS, REFER TO 3255239-CA-2003.
5. ALL INVERT LEVELS OF EXISTING UTILITIES ARE ASSUMED AND TO BE CONFIRMED AT SITE.

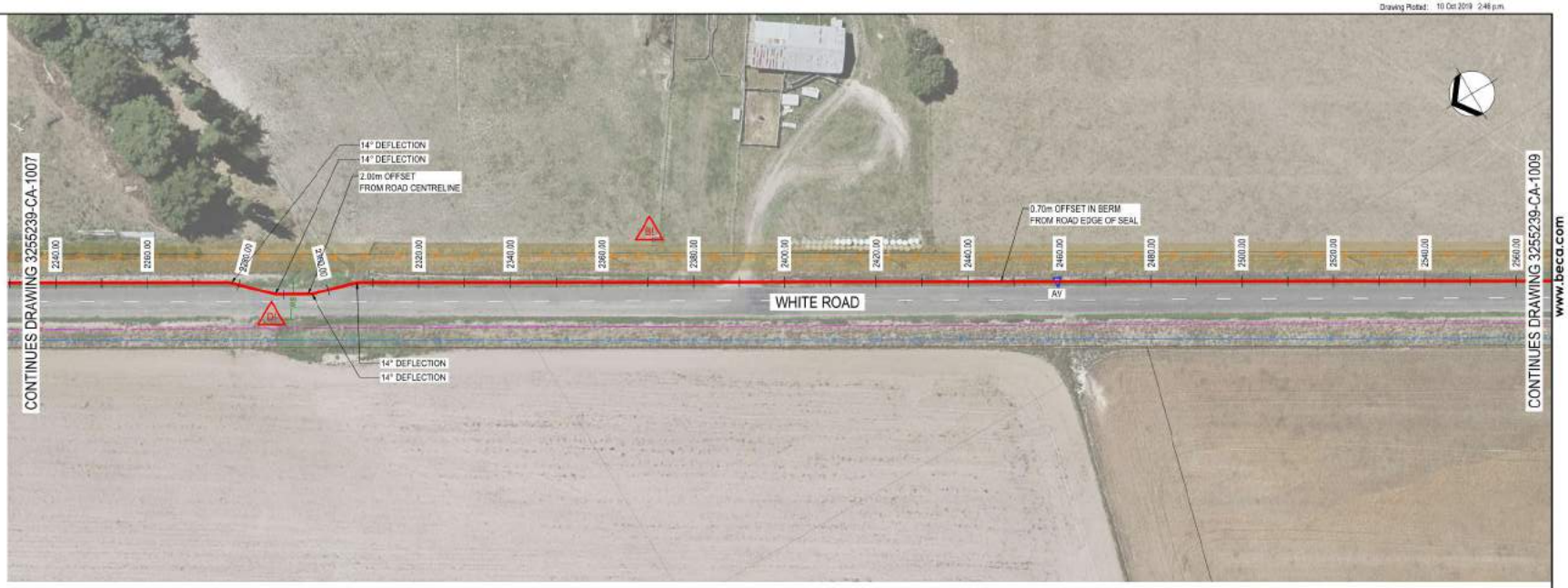

PLAN
SCALE 1:500

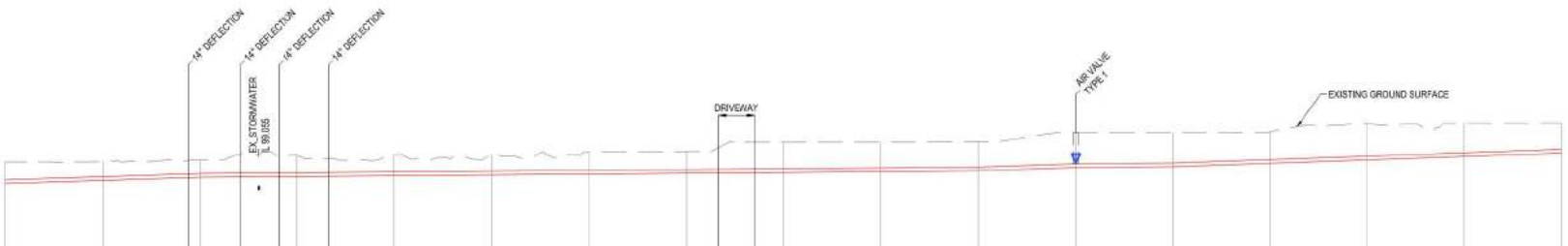

Datum R.L 95.00

EXISTING GROUND LEVEL	100.50		100.51		100.58			100.84		100.89		100.89		100.99		101.04		101.50		101.50		101.54		102.00		102.00		102.03		102.49		102.50		102.50
PIPE INVERT	99.39		99.55		99.71			99.75		99.79		99.83		99.87		99.91		99.96		100.00		100.04		100.21		100.25		100.43		100.60		100.77		100.95
DEPTH TO INVERT	1.11		0.96		0.87			1.09		1.09		1.06		1.12		1.12		1.54		1.50		1.50		1.79		1.75		1.61		1.89		1.73		1.55
COVER DEPTH	0.92		0.76		0.68			0.90		0.90		0.87		0.93		0.93		1.35		1.31		1.30		1.60		1.56		1.42		1.70		1.54		1.36
CHAINAGE	2240.00		2260.00		2278.00	2280.00	2288.28	2296.22	2300.00	2306.52	2320.00		2340.00		2360.00		2380.00	2386.57	2394.13	2400.00		2420.00		2440.00		2460.00		2480.00		2500.00		2520.00		2540.00		2560.00
PIPE SLOPE	0.8%							0.2%																0.9%		0.2%				0.9%					
PIPE MATERIAL	OD200 PE100 PN25																																		

LONGITUDINAL SECTION
SCALE HORIZONTAL 1:500
VERTICAL SCALE 1:125

ORIGINAL DRAWING IN COLOUR

FOR TENDER
NOT FOR CONSTRUCTION

No.	Revision	By	Chk	Appd	Date
T0	FOR TENDER	JA	PA	MF	10.10.19

Drawing Originator: Beca

Original Scale (A1)	Design	JA	10.10.19	Approved For Construction*
AS SHOWN	Drawn	PTS	10.10.19	
Reduced Scale (A3)	Verifier	PA	10.10.19	
AS SHOWN	Dwg Check	AS	10.10.19	Date

*Refer to Revision 1 for Original Signature

Client: CENTRAL HAWKE'S BAY DISTRICT COUNCIL

Project: OTANE TO WAIPAWA WASTEWATER RISING MAIN

Title: PLAN AND LONG SECTION SHEET 08 OF 17

Discipline: CIVIL

Drawing No. 3255239-CA-1008 Rev. T0

DO NOT SCALE

IF IN DOUBT ASK

Document No: 3255239-CA-1008.DWG

www.beca.com

www.beca.com

Drawing Plotted: 10 Oct 2019 2:48 p.m.

NOTES

1. FOR GENERAL NOTES, LEGENDS AND HAZARD WARNINGS REFER TO DRAWING 3255239-CA-0002.
2. FOR AIR VALVE DETAILS, REFER TO 3255239-CA-2001.
3. FOR SCOUR DETAILS, REFER TO 3255239-CA-2002.
4. FOR TRENCH AND CULVERT CROSSING DETAILS, REFER TO 3255239-CA-2003.
5. ALL INVERT LEVELS OF EXISTING UTILITIES ARE ASSUMED AND TO BE CONFIRMED AT SITE.

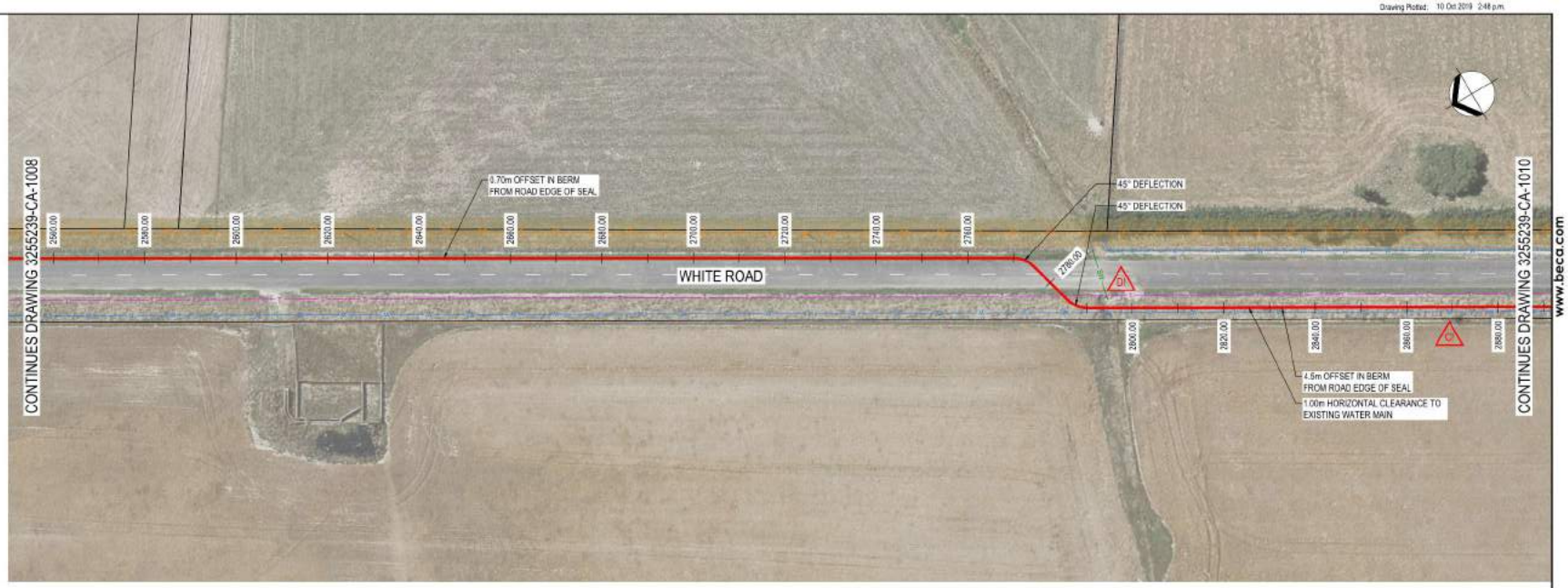

PLAN
SCALE 1:500

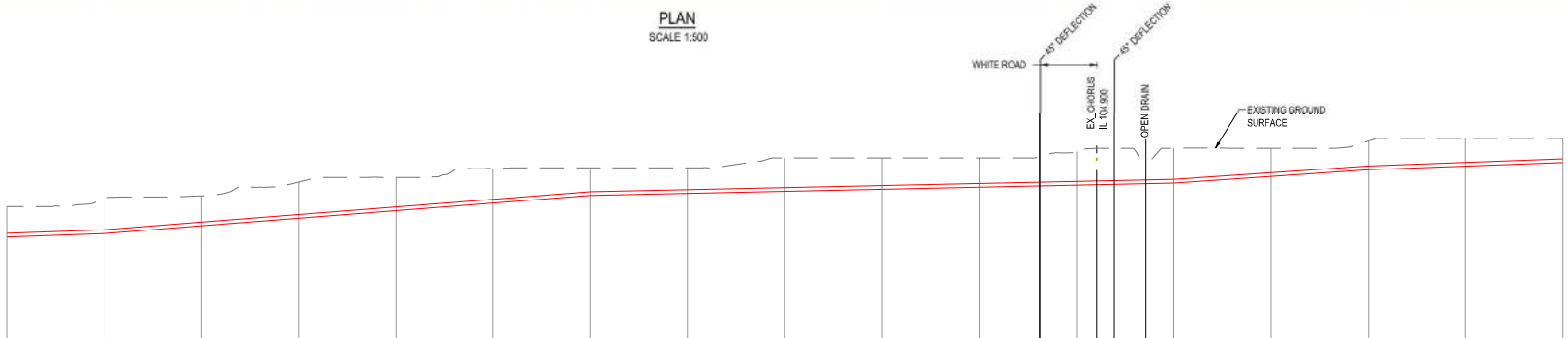

Datum R.L 95.00

EXISTING GROUND LEVEL	102.50	102.91	103.05	103.77	104.00	104.46	104.50	104.50	105.00	105.00	105.00	105.32	105.32	105.50	105.50	105.88	106.00	106.00
PIPE INVERT	100.95	101.12	101.52	101.91	102.30	102.69	103.08	103.19	103.29	103.40	103.50	103.61	103.71	104.06	104.40	104.58	104.76
DEPTH TO INVERT	1.55	1.78	1.54	1.86	1.70	1.77	1.41	1.31	1.71	1.60	1.50	1.72	1.79	1.44	1.48	1.42	1.24
COVER DEPTH	1.36	1.59	1.35	1.67	1.51	1.58	1.23	1.12	1.52	1.41	1.31	1.53	1.60	1.25	1.29	1.23	1.05
CHAINAGE	2560.00	2580.00	2600.00	2620.00	2640.00	2660.00	2680.00	2700.00	2720.00	2740.00	2760.00	2772.44	2786.00	2784.17	2787.75	2794.00	2800.00	2820.00	2840.00	2860.00	2880.00
PIPE SLOPE	0.9%	2.0%	2.0%	0.5%	1.7%	0.9%
PIPE MATERIAL	OD200 PE100 PN25

LONGITUDINAL SECTION
SCALE HORIZONTAL 1:500
VERTICAL SCALE 1:125

ORIGINAL DRAWING IN COLOUR

FOR TENDER
NOT FOR CONSTRUCTION

No.	Revision	By	Chk	Appd	Date
T0	FOR TENDER	JA	PA	MF	10.10.19

Drawing Originator: Beca

Original Scale (A1) AS SHOWN	Design	JA	10.10.19
	Drawn	PTS	10.10.19
Reduced Scale (A3) AS SHOWN	Verifier	PA	10.10.19
	Dwg Check	AS	10.10.19

Approved For Construction* Date

* Refer to Revision 1 for Original Signature

Client: CENTRAL HAWKE'S BAY DISTRICT COUNCIL

Project: OTANE TO WAIPAWA WASTEWATER RISING MAIN

Title: PLAN AND LONG SECTION SHEET 09 OF 17

Discipline: CIVIL

Drawing No.: 3255239-CA-1009 Rev. T0

DO NOT SCALE

IF IN DOUBT ASK.

www.beca.com

Document No. 3255239-CA-1009.DWG

Drawing Plotted: 10 Oct 2019 3:00 p.m.

NOTES

1. FOR GENERAL NOTES, LEGENDS AND HAZARD WARNINGS REFER TO DRAWING 3255239-CA-0002.
2. FOR AIR VALVE DETAILS, REFER TO 3255239-CA-2001.
3. FOR SCOUR DETAILS, REFER TO 3255239-CA-2002.
4. FOR TRENCH AND CULVERT CROSSING DETAILS, REFER TO 3255239-CA-2003.
5. ALL INVERT LEVELS OF EXISTING UTILITIES ARE ASSUMED AND TO BE CONFIRMED AT SITE.

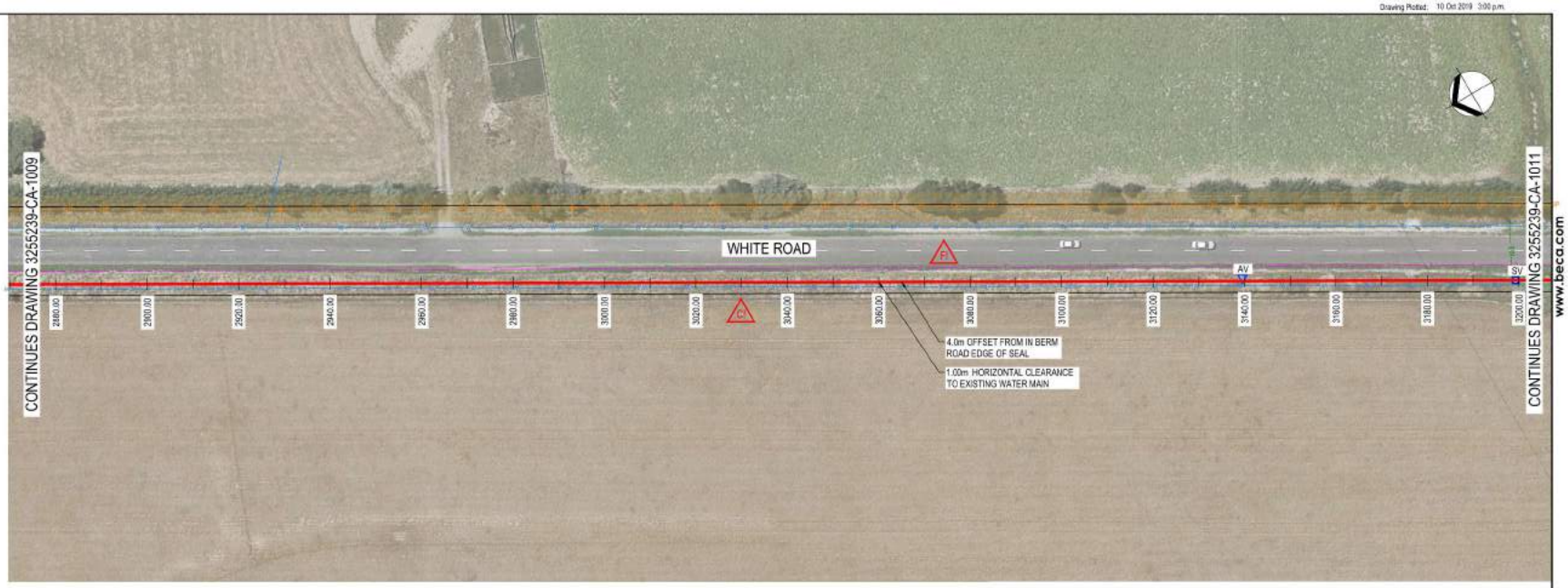

PLAN
SCALE 1:500

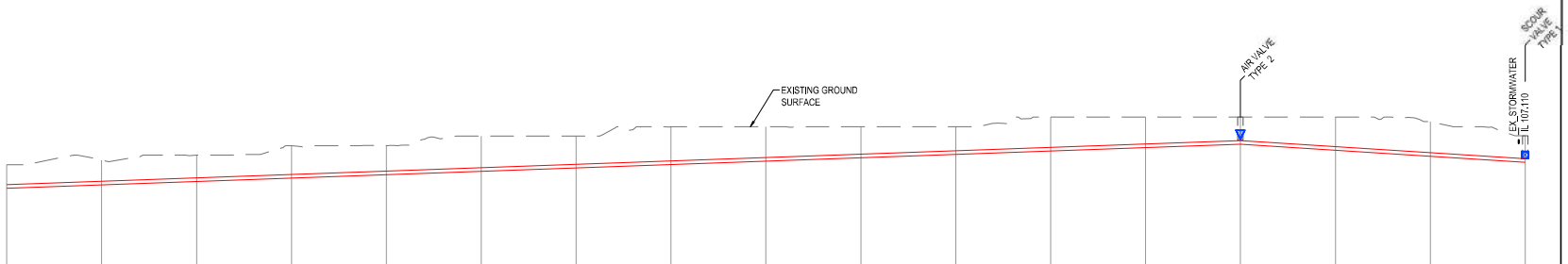

Datum R.L 100.00

EXISTING GROUND LEVEL	106.00	106.24	106.50	107.00	107.00	107.50	107.50	107.99	108.00	108.00	108.00	108.50	108.50	108.50	108.50	108.27	107.52
PIPE INVERT	104.76	104.94	105.11	105.29	105.47	105.65	105.83	106.00	106.18	106.36	106.54	106.72	106.89	107.07	106.75	106.44	106.12
DEPTH TO INVERT	1.24	1.30	1.38	1.71	1.53	1.85	1.67	1.99	1.82	1.64	1.46	1.78	1.61	1.43	1.75	1.83	1.40	1.52
COVER DEPTH	1.05	1.11	1.20	1.52	1.34	1.66	1.48	1.80	1.63	1.45	1.27	1.59	1.42	1.24	1.56	1.64	1.21
CHAINAGE	2880.00	2900.00	2920.00	2940.00	2960.00	2980.00	3000.00	3020.00	3040.00	3060.00	3080.00	3100.00	3120.00	3140.00	3160.00	3180.00	3200.00
PIPE SLOPE	0.9%													-1.6%			
PIPE MATERIAL	OD200 PE100 PN25																

LONGITUDINAL SECTION
SCALE HORIZONTAL 1:500
VERTICAL SCALE 1:125

ORIGINAL DRAWING IN COLOUR

FOR TENDER
NOT FOR CONSTRUCTION

No.	Revision	By	Chk	Appd	Date
T0	FOR TENDER	JA	PA	MF	10.10.19

Drawing Originator: Beca

Original Scale (A1) AS SHOWN	Design	JA	10.10.19
	Drawn	PTS	10.10.19
Reduced Scale (A3) AS SHOWN	Verifier	PA	10.10.19
	Dwg Check	AS	10.10.19

Approved For Construction* Date
* Refer to Revision 1 for Original Signature

Client: CENTRAL HAWKE'S BAY DISTRICT COUNCIL

Project: OTANE TO WAIPAWA WASTEWATER RISING MAIN

Title: PLAN AND LONG SECTION SHEET 10 OF 17

Discipline: CIVIL

Drawing No.: 3255239-CA-1010 Rev. T0

DO NOT SCALE

IF IN DOUBT ASK.

www.beca.com

Document No. 3255239-CA-1010.DWG

Drawing Plotted: 10 Oct 2019 3:00 p.m.

NOTES

1. FOR GENERAL NOTES, LEGENDS AND HAZARD WARNINGS REFER TO DRAWING 3255239-CA-0002.
2. FOR AIR VALVE DETAILS, REFER TO 3255239-CA-2001.
3. FOR SCOUR DETAILS, REFER TO 3255239-CA-2002.
4. FOR TRENCH AND CULVERT CROSSING DETAILS, REFER TO 3255239-CA-2003.
5. ALL INVERT LEVELS OF EXISTING UTILITIES ARE ASSUMED AND TO BE CONFIRMED AT SITE.

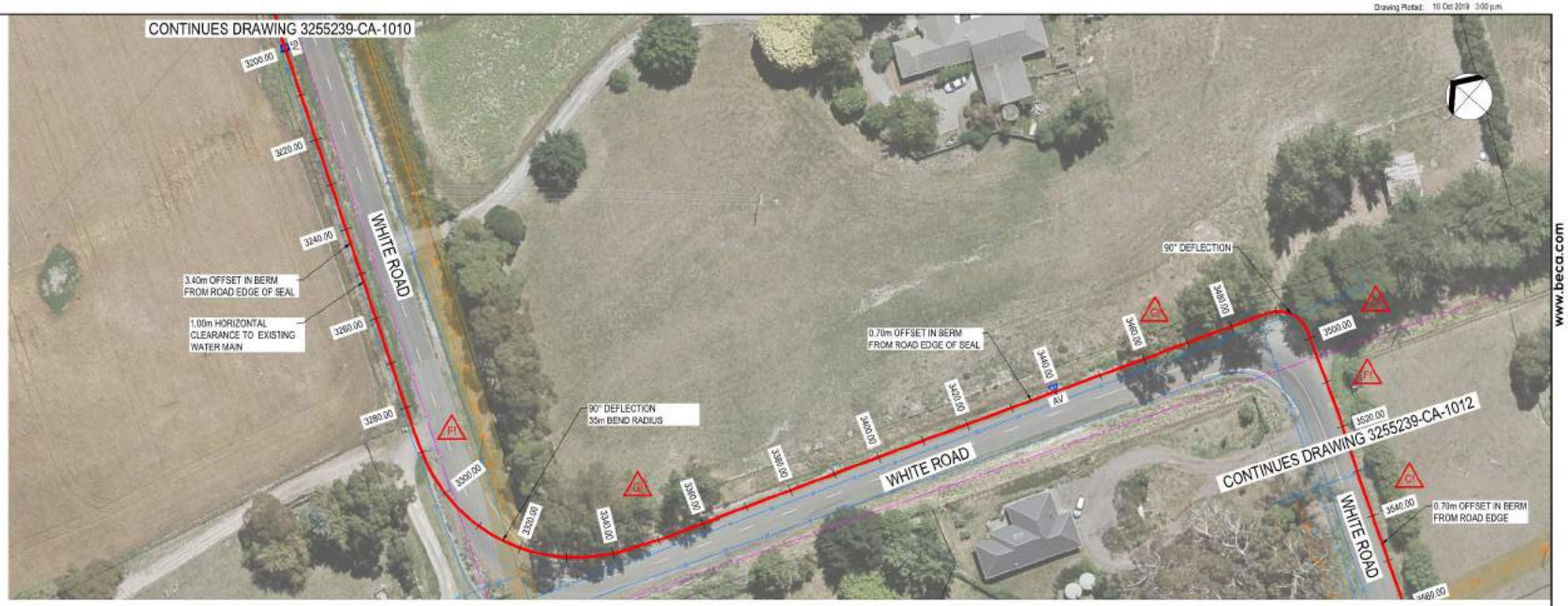

PLAN

SCALE 1:500

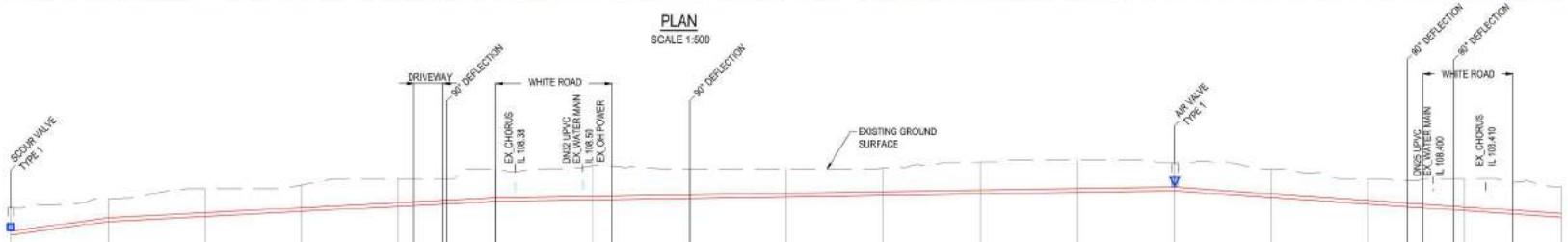

Datum R.L 100.00

EXISTING GROUND LEVEL	107.92		108.00		108.50		108.88		109.00				109.51		109.69		109.50		109.50		109.56		109.89		110.00		109.81		109.50		109.00				109.00		108.61
PIPE INVERT	106.12		106.81		107.07		107.33		107.59				107.85		107.93		108.01		108.08		108.16		108.24		108.32		108.40		108.05		107.71				107.37		107.03
DEPTH TO INVERT	1.40		1.19		1.43		1.35		1.41				1.65		1.76		1.49		1.42		1.40		1.65		1.68		1.41		1.45		1.29				1.63		1.58
COVER DEPTH	1.21		1.00		1.24		1.16		1.22				1.46		1.57		1.30		1.23		1.21		1.46		1.49		1.22		1.26		1.10				1.44		1.39
CHAINAGE	3200.00		3220.00		3240.00		3260.00		3280.00	3285.22	3289.17	3290.00	3300.00		3320.00	3324.00	3340.00		3360.00		3380.00		3400.00		3420.00		3440.00		3460.00		3480.00	3488.17	3491.51	3498.50	3500.00	3510.16	3520.00
PIPE SLOPE	3.5%				1.3%										0.4%														-1.7%								
PIPE MATERIAL	OD200 PE100 PN25																																				

LONGITUDINAL SECTION

SCALE HORIZONTAL 1:500
VERTICAL SCALE 1:125

ORIGINAL DRAWING IN COLOUR

FOR TENDER
NOT FOR CONSTRUCTION

No.	Revision	By	Chk	Appd	Date
T0	FOR TENDER	JA	PA	MF	10.10.19

Drawing Originator: Beca

Original Scale (A1) AS SHOWN; Reduced Scale (A3) AS SHOWN

Design	JA	10.10.19	Approved For Construction*
Drawn	PTS	10.10.19	
Verifier	PA	10.10.19	
Dwg Check	AS	10.10.19	Date

*Refer to Revision 1 for Original Signature

Client: CENTRAL HAWKE'S BAY DISTRICT COUNCIL

Project: OTANE TO WAIPAWA WASTEWATER RISING MAIN

Title: PLAN AND LONG SECTION SHEET 11 OF 17

Discipline: CIVIL

Drawing No. 3255239-CA-1011 Rev. T0

DO NOT SCALE

IF IN DOUBT ASK

Document No. 3255239-CA-1011.DWG

www.beca.com

www.beca.com

Drawing Plotted: 10 Oct 2019 2:59 p.m.

NOTES

1. FOR GENERAL NOTES, LEGENDS AND HAZARD WARNINGS REFER TO DRAWING 3255239-CA-0002.
2. FOR AIR VALVE DETAILS, REFER TO 3255239-CA-2001.
3. FOR SCOUR DETAILS, REFER TO 3255239-CA-2002.
4. FOR TRENCH AND CULVERT CROSSING DETAILS, REFER TO 3255239-CA-2003.
5. ALL INVERT LEVELS OF EXISTING UTILITIES ARE ASSUMED AND TO BE CONFIRMED AT SITE.

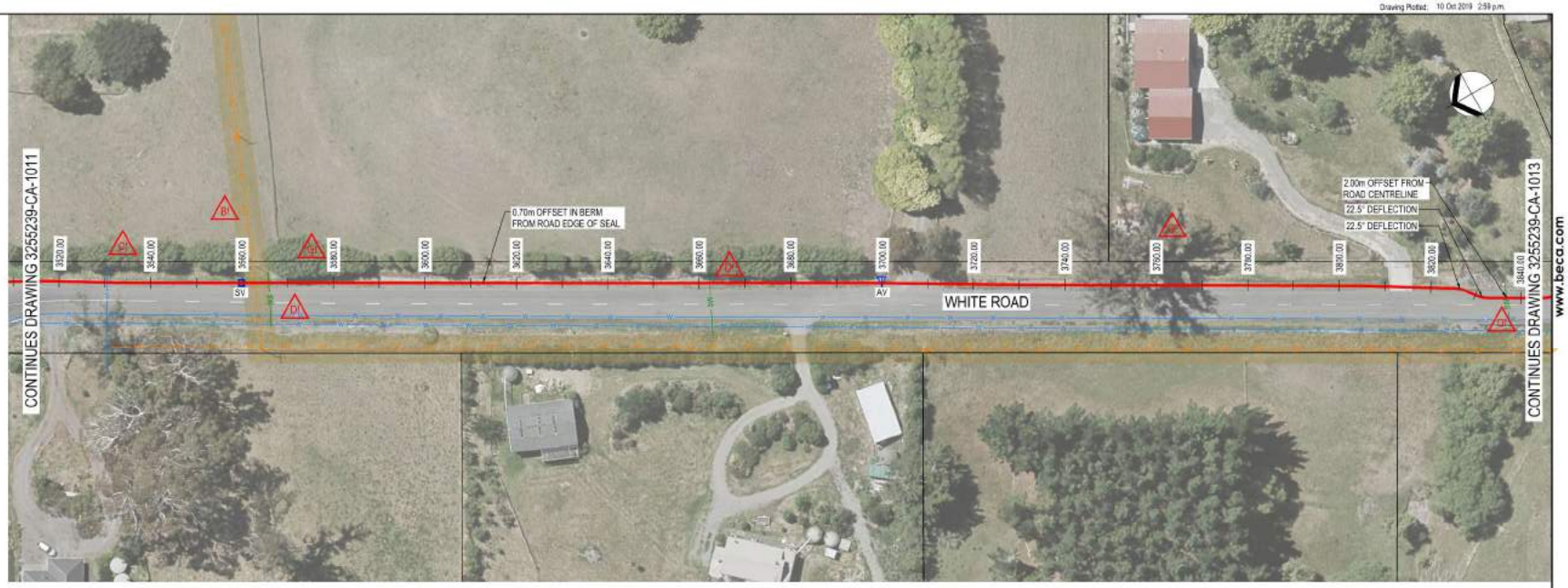

PLAN
SCALE 1:500

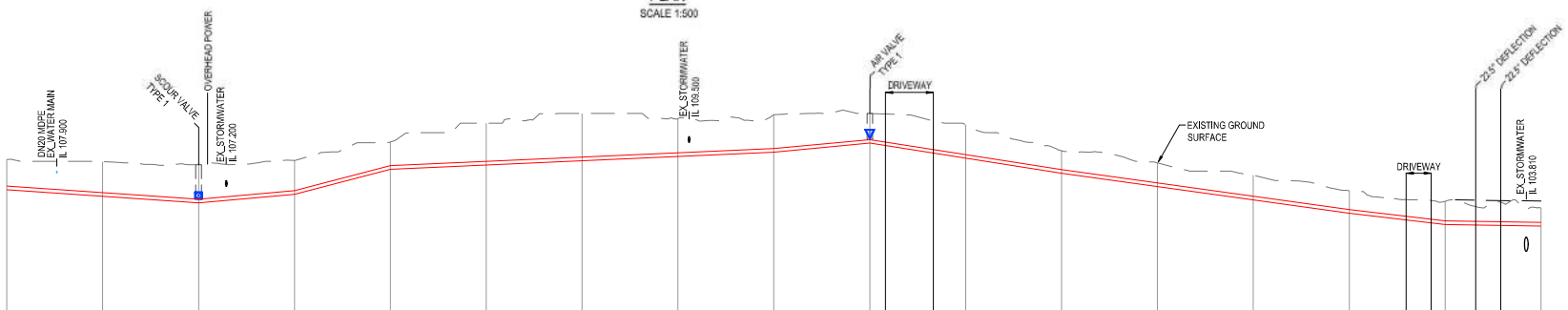

Datum R.L 100.00

EXISTING GROUND LEVEL	108.61	108.50	108.35	108.56	109.52	110.50	111.00	110.74	110.94	111.00		110.42	109.06	108.43	107.79	106.97		106.42			108.07
PIPE INVERT	107.03	106.69	106.35	106.79	108.10	108.32	108.54	108.76	108.98	109.46		108.67	107.88	107.19	106.50	105.81		105.21			105.13
DEPTH TO INVERT	1.58	1.81	2.01	1.77	1.42	2.18	2.46	1.98	1.96	1.55		1.75	1.18	1.24	1.29	1.17		1.21			0.95
COVER DEPTH	1.39	1.62	1.82	1.58	1.23	1.99	2.27	1.79	1.77	1.36		1.56	0.99	1.05	1.10	0.98		1.02			0.76
CHAINAGE	3520.00	3540.00	3560.00	3580.00	3600.00	3620.00	3640.00	3660.00	3680.00	3700.00	3703.11	3713.31	3720.00	3740.00	3760.00	3780.00	3800.00	3811.90	3817.10	3820.00	3826.39	3831.61	3840.00
PIPE SLOPE	-1.7%			2.2%	6.6%	1.1%				2.4%	-3.9%				-3.5%			-3.0%			-0.4%		
PIPE MATERIAL	OD200 PE100 PN25																						

LONGITUDINAL SECTION
SCALE HORIZONTAL 1:500
VERTICAL SCALE 1:125

ORIGINAL DRAWING IN COLOUR

FOR TENDER
NOT FOR CONSTRUCTION

No.	Revision	By	Chk	Appd	Date
T0	FOR TENDER	JA	PA	MF	10.10.19

Drawing Originator: Beca

Original Scale (A1) AS SHOWN	Design	JA	10.10.19
	Drawn	PTS	10.10.19
Reduced Scale (A3) AS SHOWN	Verifier	PA	10.10.19
	Dwg Check	AS	10.10.19

Approved For Construction* Date

* Refer to Revision 1 for Original Signature

Client: CENTRAL HAWKE'S BAY DISTRICT COUNCIL

Project: OTANE TO WAIPAWA WASTEWATER RISING MAIN

Title: PLAN AND LONG SECTION SHEET 12 OF 17

Discipline: CIVIL

Drawing No.: 3255239-CA-1012 Rev. T0

DO NOT SCALE

IF IN DOUBT ASK.

www.beca.com

Document No. 3255239-CA-1012.DWG

Drawing Plotted: 10 Oct 2019 2:59 p.m.

NOTES

1. FOR GENERAL NOTES, LEGENDS AND HAZARD WARNINGS REFER TO DRAWING 3255239-CA-0002.
2. FOR AIR VALVE DETAILS, REFER TO 3255239-CA-2001.
3. FOR SCOUR DETAILS, REFER TO 3255239-CA-2002.
4. FOR TRENCH AND CULVERT CROSSING DETAILS, REFER TO 3255239-CA-2003.
5. ALL INVERT LEVELS OF EXISTING UTILITIES ARE ASSUMED AND TO BE CONFIRMED AT SITE.

PLAN
SCALE 1:500

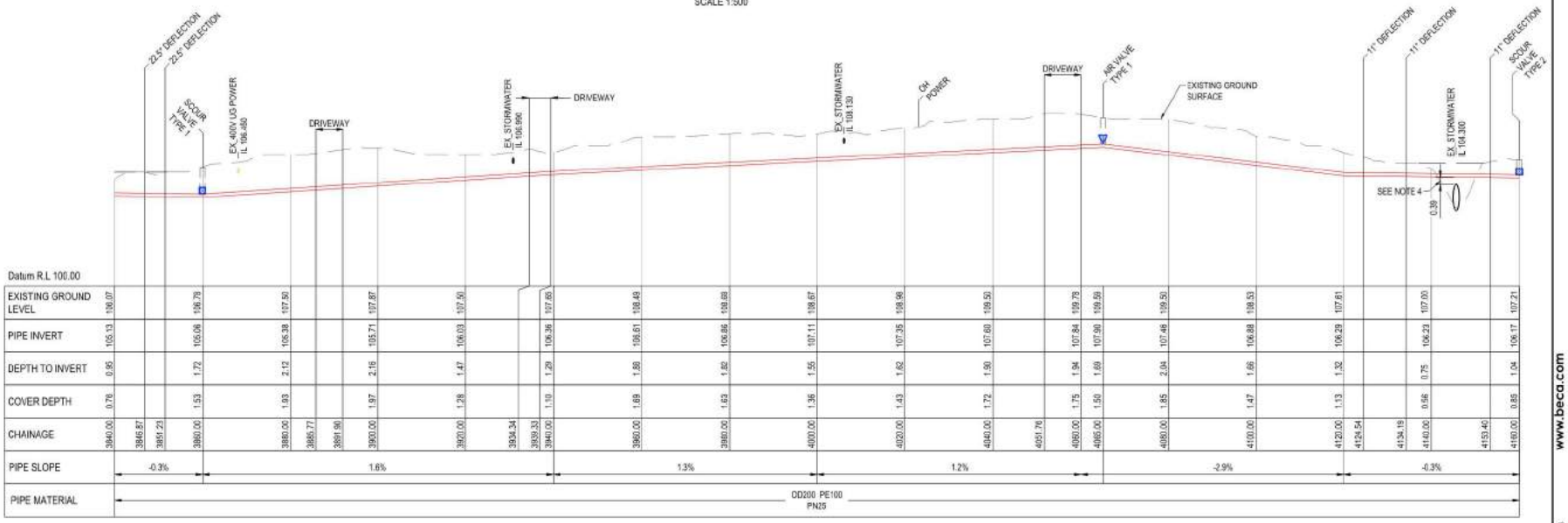

CHAINAGE	EXISTING GROUND LEVEL	PIPE INVERT	DEPTH TO INVERT	COVER DEPTH
3840.00	106.07	105.13	0.95	0.76
3846.87				
3851.23				
3860.00	106.79	105.06	1.72	1.53
3860.00	107.50	105.38	2.12	1.93
3865.77				
3881.90				
3900.00	107.87	105.71	2.16	1.97
3920.00	107.50	106.03	1.47	1.28
3934.34				
3939.33				
3940.00	107.65	106.36	1.29	1.10
3960.00	108.49	106.61	1.88	1.69
3980.00	108.88	106.86	1.82	1.63
4000.00	108.67	107.11	1.55	1.36
4020.00	108.98	107.35	1.62	1.43
4040.00	109.50	107.60	1.90	1.72
4051.76				
4060.00	109.78	107.84	1.94	1.75
4065.00	109.69	107.80	1.89	1.50
4080.00	109.50	107.46	2.04	1.85
4100.00	108.53	106.88	1.66	1.47
4120.00	107.61	106.29	1.32	1.13
4124.54				
4134.19				
4140.00	107.00	106.23	0.75	0.56
4153.40				
4160.00	107.21	106.17	1.04	0.85

LONGITUDINAL SECTION
SCALE HORIZONTAL 1:500
VERTICAL SCALE 1:125

ORIGINAL DRAWING IN COLOUR

FOR TENDER
NOT FOR CONSTRUCTION

No.	Revision	By	Chk	Appd	Date
T0	FOR TENDER	JA	PA	MF	10.10.19

Drawing Originator: Beca

Original Scale (A1) AS SHOWN	Design	JA	10.10.19	Approved For Construction*
	Drawn	PTS	10.10.19	
Reduced Scale (A3) AS SHOWN	Verifier	PA	10.10.19	
	Dwg Check	AS	10.10.19	Date

*Refer to Revision 1 for Original Signature

Client: CENTRAL HAWKE'S BAY DISTRICT COUNCIL

Project: OTANE TO WAIPAWA WASTEWATER RISING MAIN

Title: PLAN AND LONG SECTION SHEET 13 OF 17

Discipline: CIVIL

Drawing No. 3255239-CA-1013 Rev. T0

DO NOT SCALE

IF IN DOUBT ASK

Document No: 3255239-CA-1013.DWG

www.beca.com

www.beca.com

Drawing Plotted: 10 Oct 2019 2:59 p.m.

NOTES

1. FOR GENERAL NOTES, LEGENDS AND HAZARD WARNINGS REFER TO DRAWING 3255239-CA-0002.
2. FOR AIR VALVE DETAILS, REFER TO 3255239-CA-2001.
3. FOR SCOUR DETAILS, REFER TO 3255239-CA-2002.
4. FOR TRENCH AND CULVERT CROSSING DETAILS, REFER TO 3255239-CA-2003.
5. ALL INVERT LEVELS OF EXISTING UTILITIES ARE ASSUMED AND TO BE CONFIRMED AT SITE.

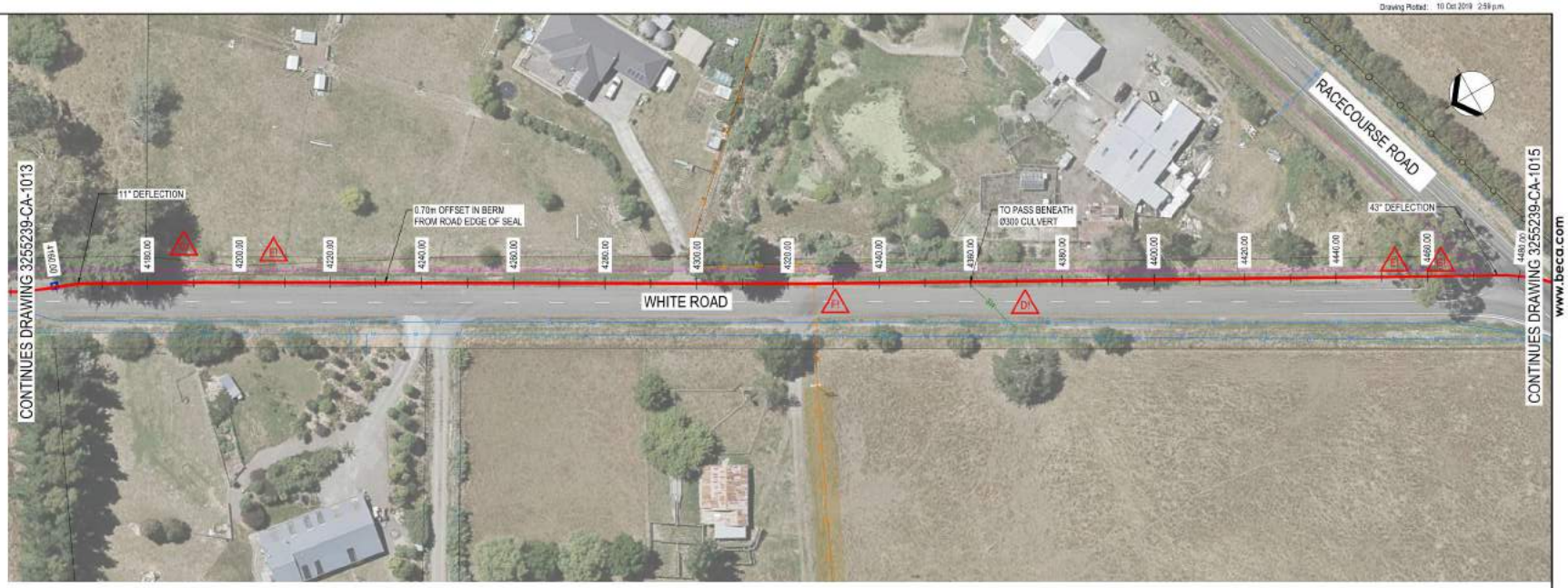

PLAN

SCALE 1:500

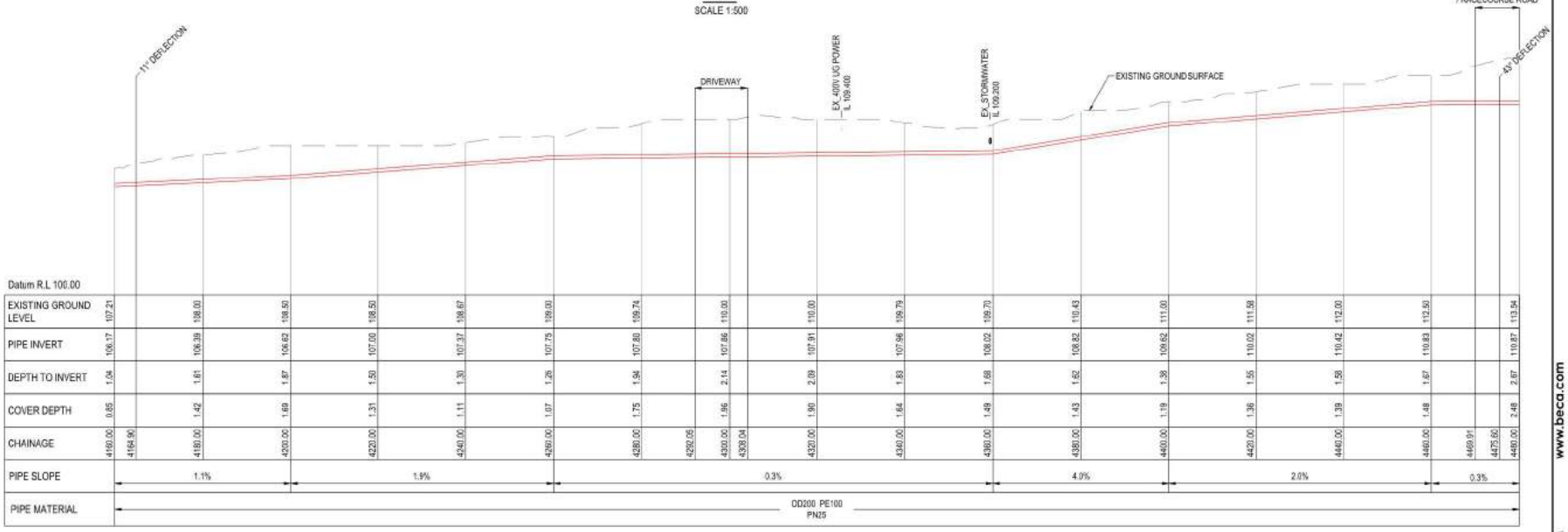

CHAINAGE	EXISTING GROUND LEVEL	PIPE INVERT	DEPTH TO INVERT	COVER DEPTH
4160.00	107.21	106.17	1.04	0.65
4164.90				
4180.00	108.00	106.39	1.61	1.42
4200.00	108.50	106.62	1.87	1.69
4220.00	108.50	107.00	1.50	1.31
4240.00	108.67	107.37	1.30	1.11
4260.00	109.00	107.75	1.26	1.07
4280.00	109.74	107.80	1.94	1.75
4292.05				
4300.00	110.00	107.86	2.14	1.96
4308.04				
4320.00	110.00	107.91	2.09	1.90
4340.00	109.79	107.96	1.83	1.64
4360.00	109.70	108.02	1.68	1.49
4380.00	110.43	108.82	1.62	1.43
4400.00	111.00	109.62	1.38	1.19
4420.00	111.58	110.02	1.55	1.36
4440.00	112.00	110.42	1.58	1.39
4460.00	112.50	110.83	1.67	1.48
4469.91				
4475.80				
4480.00	113.54	110.87	2.67	2.48

LONGITUDINAL SECTION

SCALE HORIZONTAL 1:500
VERTICAL SCALE 1:125

ORIGINAL DRAWING IN COLOUR

FOR TENDER
NOT FOR CONSTRUCTION

No.	Revision	By	Chk	Appd	Date
T0	FOR TENDER	JA	PA	MF	10.10.19

Drawing Originator: Beca

Original Scale (A1) AS SHOWN	Design	JA	10.10.19	Approved For Construction*
	Drawn	PTS	10.10.19	
Reduced Scale (A3) AS SHOWN	Verifier	PA	10.10.19	
	Dwg Check	AS	10.10.19	Date

*Refer to Revision 1 for Original Signature

Client: CENTRAL HAWKE'S BAY DISTRICT COUNCIL

Project: OTANE TO WAIPAWA WASTEWATER RISING MAIN

Title: PLAN AND LONG SECTION SHEET 14 OF 17

Discipline: CIVIL

Drawing No. 3255239-CA-1014 Rev. T0

DO NOT SCALE

IF IN DOUBT ASK

www.beca.com

Document No. 3255239-CA-1014.DWG

Drawing Plotted: 10 Oct 2019 2:59 p.m.

NOTES

1. FOR GENERAL NOTES, LEGENDS AND HAZARD WARNINGS REFER TO DRAWING 3255239-CA-0002.
2. FOR AIR VALVE DETAILS, REFER TO 3255239-CA-2001.
3. FOR SCOUR DETAILS, REFER TO 3255239-CA-2002.
4. FOR TRENCH AND CULVERT CROSSING DETAILS, REFER TO 3255239-CA-2003.
5. ALL INVERT LEVELS OF EXISTING UTILITIES ARE ASSUMED AND TO BE CONFIRMED AT SITE.

PLAN

SCALE 1:500

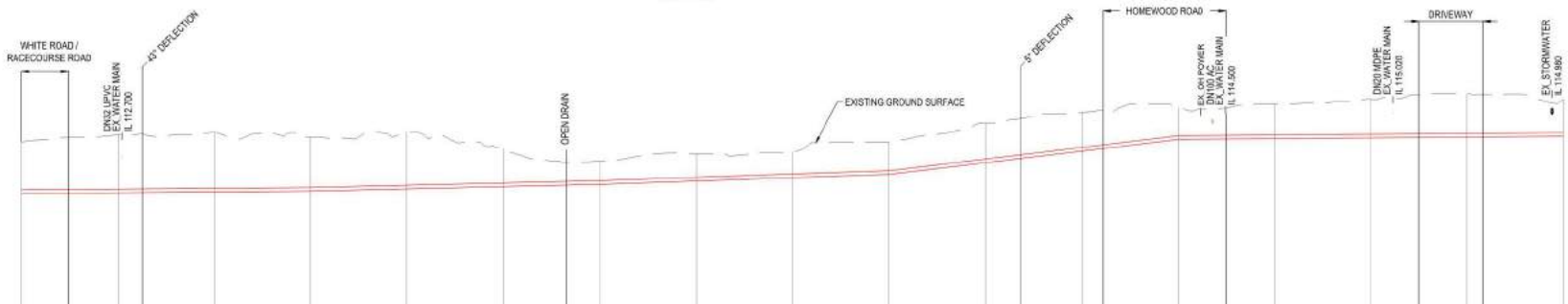

Datum R.L 105.00

EXISTING GROUND LEVEL	113.54		113.91		114.02		113.79		114.06		113.18		112.53		112.93		113.01		113.53		114.50		115.07		115.33		115.50		115.75		116.04		116.74
PIPE INVERT	110.87		110.91		110.95		110.99		111.11		111.23		111.34		111.51		111.69		111.86		112.46		113.06		113.67		113.71		113.75		113.79		113.83
DEPTH TO INVERT	2.67		3.00		3.07		2.80		2.95		1.95		1.19		1.42		1.33		1.67		2.04		2.01		1.66		1.79		2.01		2.25		1.92
COVER DEPTH	2.48		2.81		2.88		2.61		2.76		1.76		1.00		1.23		1.14		1.49		1.85		1.82		1.47		1.60		1.82		2.06		1.73
CHAINAGE	4480.00	4480.00	4500.00	4505.05	4520.00		4540.00		4560.00		4580.00	4583.00	4600.00		4620.00		4640.00		4660.00		4680.00	4687.20	4700.00	4704.37	4720.00	4730.00	4740.00		4760.00	4770.00	4780.00	4783.34		4800.00
PIPE SLOPE	0.2%							0.6%						0.9%						3.0%								0.2%						
PIPE MATERIAL	OD200 PE100 PN25																																	

LONGITUDINAL SECTION

SCALE HORIZONTAL 1:500
VERTICAL SCALE 1:125

ORIGINAL DRAWING IN COLOUR

FOR TENDER
NOT FOR CONSTRUCTION

No.	Revision	By	Chk	Appd	Date
T0	FOR TENDER	JA	PA	MF	10.10.19

Drawing Originator: Beca

Original Scale (A1) AS SHOWN
Reduced Scale (A3) AS SHOWN

Design	JA	10.10.19	Approved For Construction*
Drawn	PTS	10.10.19	
Verifier	PA	10.10.19	
Dwg Check	AS	10.10.19	Date

*Refer to Revision 1 for Original Signature

Client: CENTRAL HAWKE'S BAY DISTRICT COUNCIL

Project: OTANE TO WAIPAWA WASTEWATER RISING MAIN

Title: PLAN AND LONG SECTION SHEET 15 OF 17

Discipline: CIVIL

Drawing No. 3255239-CA-1015 Rev. T0

DO NOT SCALE

IF IN DOUBT ASK

Document No: 3255239-CA-1015.DWG

www.beca.com

Drawing Plotted: 10 Oct 2019 2:58 p.m.

NOTES

1. FOR GENERAL NOTES, LEGENDS AND HAZARD WARNINGS REFER TO DRAWING 3255239-CA-0002.
2. FOR AIR VALVE DETAILS, REFER TO 3255239-CA-2001.
3. FOR SCOUR DETAILS, REFER TO 3255239-CA-2002.
4. FOR TRENCH AND CULVERT CROSSING DETAILS, REFER TO 3255239-CA-2003.
5. ALL INVERT LEVELS OF EXISTING UTILITIES ARE ASSUMED AND TO BE CONFIRMED AT SITE.

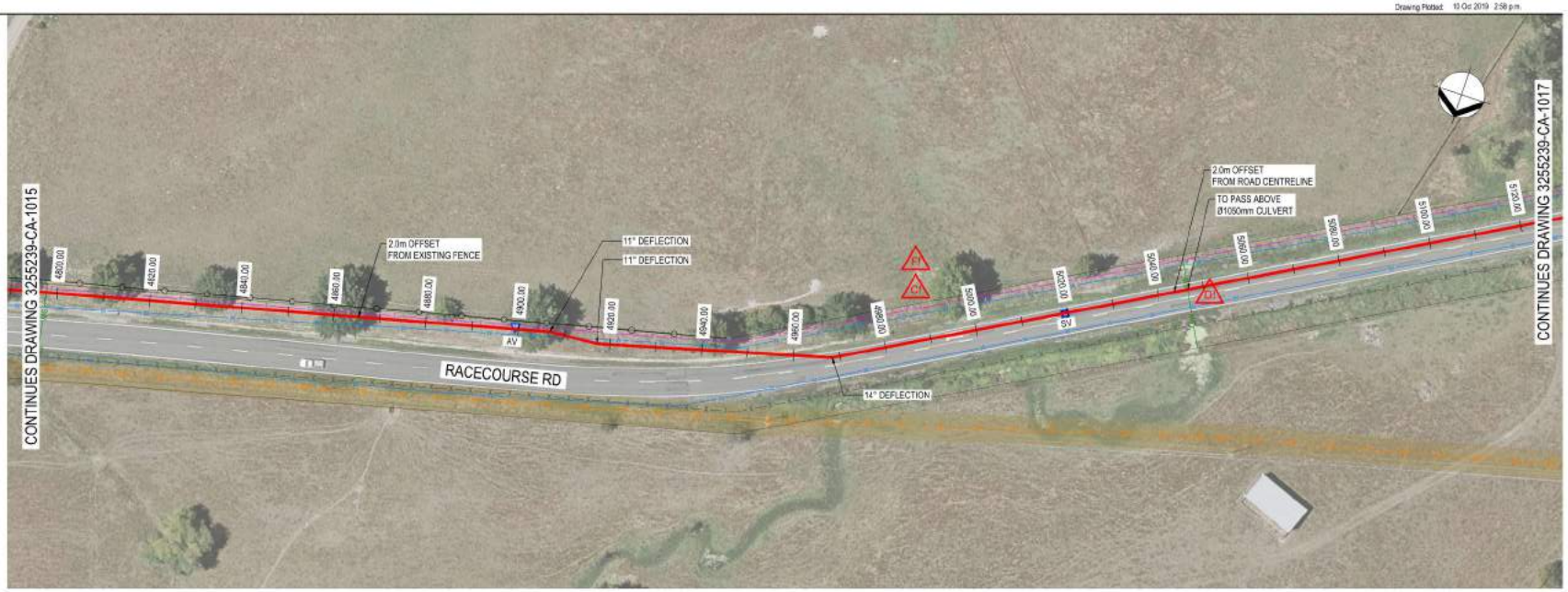

PLAN
SCALE 1:500

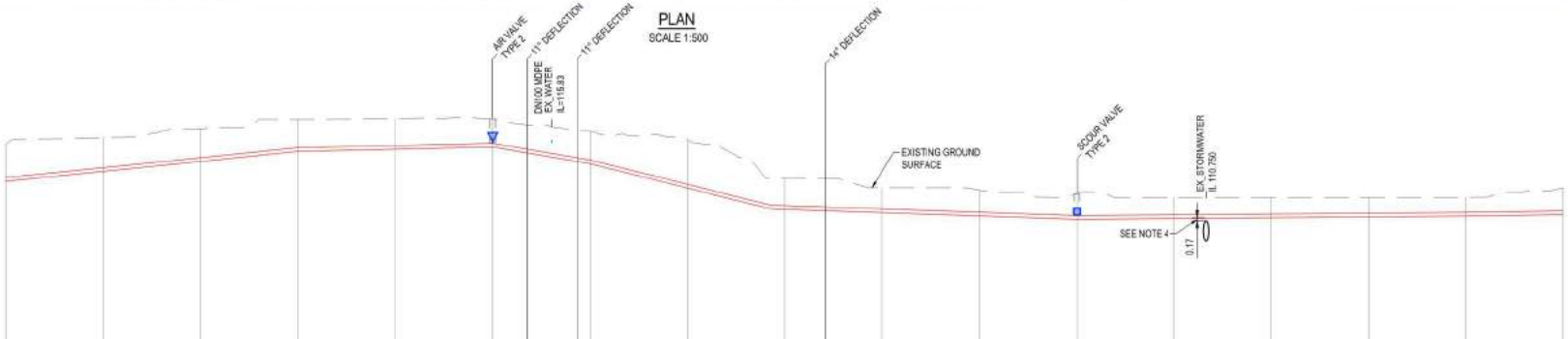

Datum R.L 105.00

EXISTING GROUND LEVEL	115.74		116.05		116.53		117.00		117.04		117.01		116.39		115.96		114.00	114.00		113.50		113.37		113.22		113.00		113.00		113.00		113.00		113.49
PIPE INVERT	113.83		114.34		114.85		115.36		115.47		115.59		114.73		113.48		112.41	112.39		112.22		112.05		111.88		111.92		111.96		112.00		112.04		112.12
DEPTH TO INVERT	1.92		1.73		1.68		1.64		1.56		1.42		1.66		2.48		1.59	1.61		1.29		1.32		1.34		1.00		1.04		1.00		0.96		1.37
COVER DEPTH	1.79		1.54		1.49		1.45		1.37		1.23		1.47		2.29		1.40	1.42		1.10		1.13		1.15		0.88		0.85		0.81		0.77		1.18
CHAINAGE	4800.00		4820.00		4840.00		4860.00		4880.00		4900.00	4907.05	4917.36		4920.00		4940.00	4957.18	4960.00	4968.35		4980.00		5000.00		5020.00		5040.00		5060.00		5080.00		5100.00		5120.00
PIPE SLOPE	2.6%					0.6%					-4.3%			-6.2%					-0.8%							0.2%								0.4%	
PIPE MATERIAL	OD200 PE100 PN25																																		

LONGITUDINAL SECTION
SCALE HORIZONTAL 1:500
VERTICAL SCALE 1:125

ORIGINAL DRAWING IN COLOUR

FOR TENDER
NOT FOR CONSTRUCTION

No.	Revision	By	Chk	Appr	Date
T0	FOR TENDER	JA	PA	MF	10.10.19

Drawing Originator: Beca

Original Scale (A1) AS SHOWN	Design	JA	10.10.19	Approved For Construction?
Reduced Scale (A3) AS SHOWN	Drawn	PTS	10.10.19	
	Verifier	PA	10.10.19	
	Dwg Check	AS	10.10.19	Date

* Refer to Revision 1 for Original Signature

Client: CENTRAL HAWKE'S BAY DISTRICT COUNCIL

Project: OTANE TO WAIPAWA WASTEWATER RISING MAIN

Title: PLAN AND LONG SECTION SHEET 16 OF 17

Discipline: CIVIL

Drawing No: 3255239-CA-1016

Rev: T0

DO NOT SCALE

IF IN DOUBT ASK

Drawing Plotted: 10 Oct 2019 3:00 p.m.

NOTES

1. FOR GENERAL NOTES, LEGENDS AND HAZARD WARNINGS REFER TO DRAWING 3255239-CA-0002.
2. FOR AIR VALVE DETAILS, REFER TO 3255239-CA-2001.
3. FOR SCOUR DETAILS, REFER TO 3255239-CA-2002.
4. FOR TRENCH AND CULVERT CROSSING DETAILS, REFER TO 3255239-CA-2003.
5. ALL INVERT LEVELS OF EXISTING UTILITIES ARE ASSUMED AND TO BE CONFIRMED AT SITE.

PLAN
SCALE 1:500

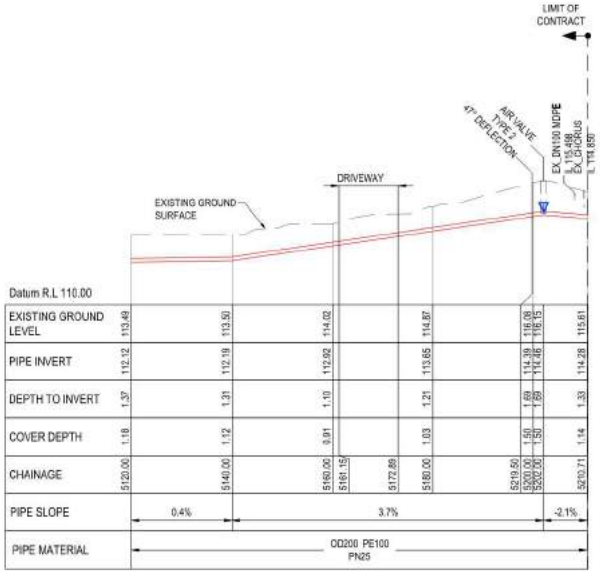

LONGITUDINAL SECTION
SCALE HORIZONTAL 1:500
VERTICAL SCALE 1:125

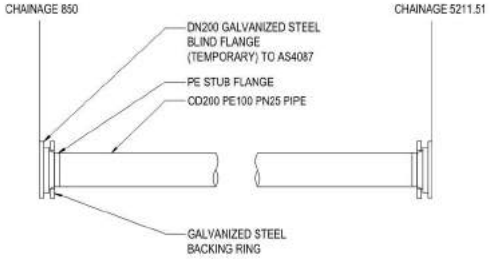

01 TEMPORARY TERMINATION DETAIL AT F.H. LIMIT OF WORK
SCALE 1:10

ORIGINAL DRAWING IN COLOUR

FOR TENDER
NOT FOR CONSTRUCTION

No.	Revision	By	Chk	Appd	Date
T0	FOR TENDER	JA	PA	MF	10.10.19

Drawing Originator: Beca

Original Scale (A1) AS SHOWN; Reduced Scale (A3) AS SHOWN

Design	JA	10.10.19	Approved For Construction*
Drawn	PTS	10.10.19	
Verifier	PA	10.10.19	
Dwg Check	AS	10.10.19	Date

*Refer to Revision 1 for Original Signature

Client: CENTRAL HAWKE'S BAY DISTRICT COUNCIL

Project: OTANE TO WAIPAWA WASTEWATER RISING MAIN

Title: PLAN AND LONG SECTION SHEET 17 OF 17

Discipline: CIVIL

Drawing No. 3255239-CA-1017 Rev. T0

DO NOT SCALE

IF IN DOUBT ASK

Document No. 3255239-CA-1017.DWG

www.beca.com

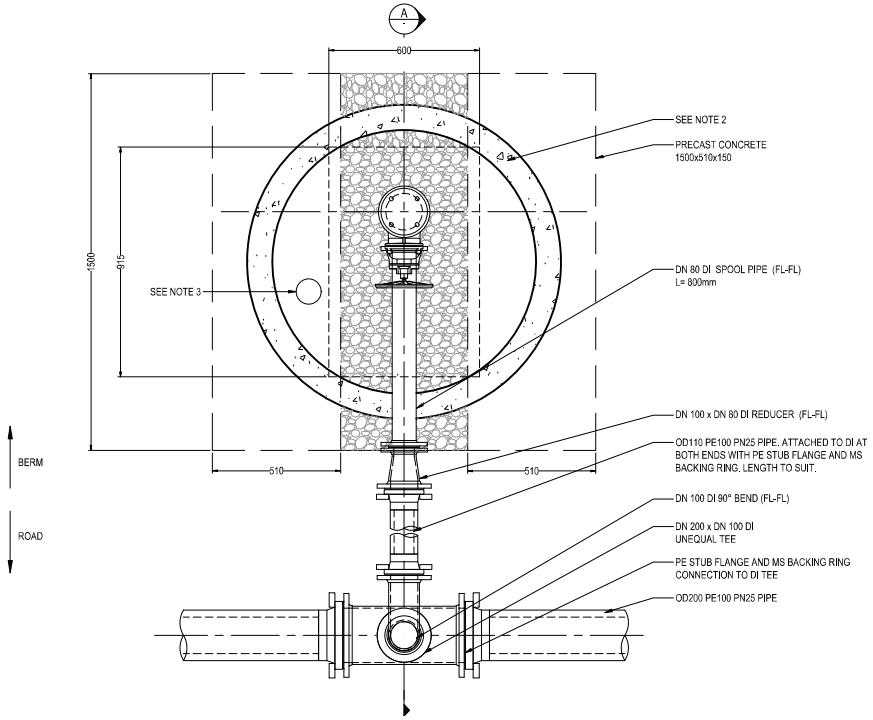

TYPE 1: AIR VALVE BELOW GROUND PIT PLAN (PIPE IN ROAD)

SCALE 1:10

AIR VALVE		
ITEM NO.	CHAINAGE	PLAN
1	740	CA-1003
2	1480	CA-1005
3	2460	CA-1008
4	3140	CA-1010
5	3440	CA-1011
6	3700	CA-1012
7	4060	CA-1013
8	5202	CA-1017

NOTES

1. FOR GENERAL NOTES REFER TO DRAWING 3255239-CA-0002.
2. DN1050 MAINTENANCE SHAFT (900MM LENGTH) AND CONCRETE PRECAST COVER WITH 915x600 CLASS D LID OR SIMILAR.
3. DN100 UPCV VENT PIPE TO PENETRATE CONCRETE PRECAST COVER WITH MUSHROOM VENT CAP.
4. ALL PIPES AND FITTINGS TO SUIT PN25 RATING.
5. ALL BELOW GROUND FLANGES TO BE PROTECTED BY MASTIC FILLER, PETROLATUM TAPE AND POLYETHYLENE SLEEVE.
6. LOCATIONS OF AIR VALVE INSTALLATIONS IS SHOWN ON PLAN AND LONGITUDINAL SECTION DRAWINGS.
7. SOIL BEARING PRESSURE (SBP) TO BE TESTED IN EACH CHAMBER LOCATION PRIOR TO CONSTRUCTION. IF SBP IS LESS THAN 150 kPa, CONSULT ENGINEER.
8. ALL CHAMBERS TO BE LOCATED OUTSIDE OF THE ROAD CARRIAGEWAY.
9. COVER SHOULD LIE AT LEAST 25mm ABOVE SURROUNDING NATURAL SURFACE LEVEL.
10. ALL BOLTS AND NUTS/FASTENERS SHALL BE MADE OF STAINLESS STEEL
11. BLIND FLANGE TO BE REMOVED FOR THE FUTURE CONNECTION OF AIR VALVE.

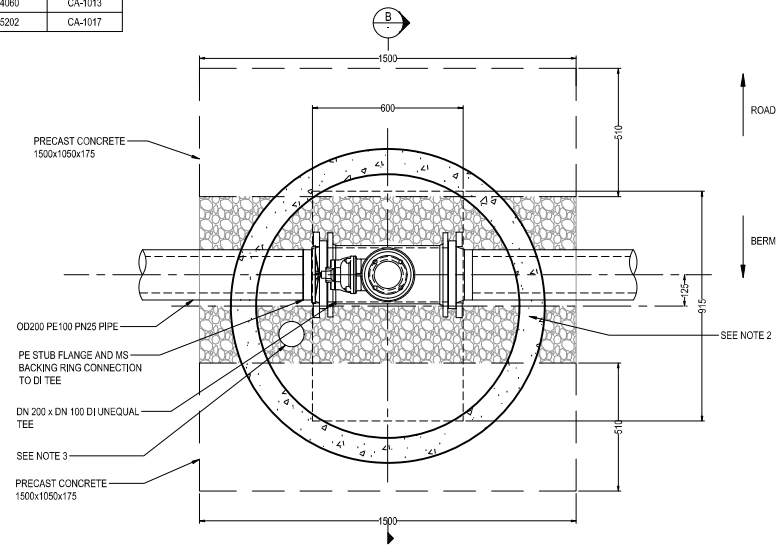

TYPE 2: AIR VALVE BELOW GROUND PIT PLAN (PIPE IN BERM)

SCALE 1:10

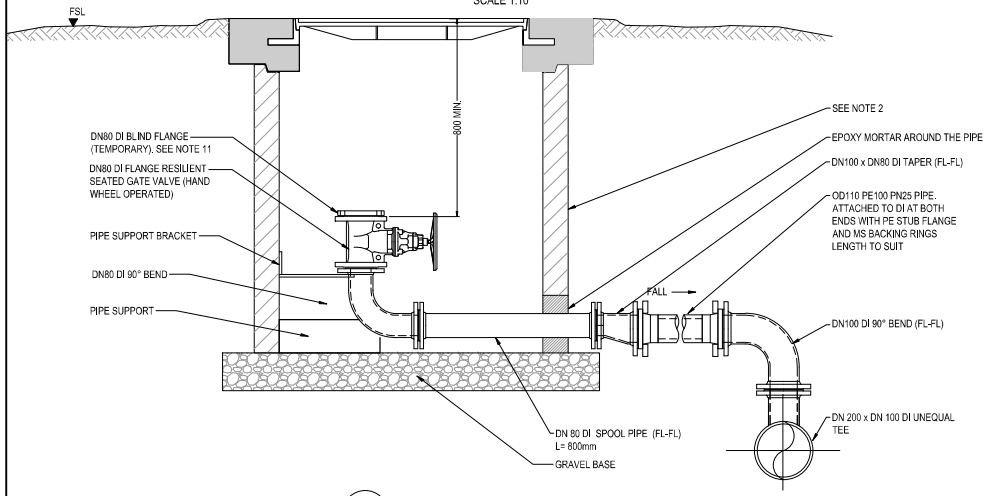

A SECTION

SCALE 1:10

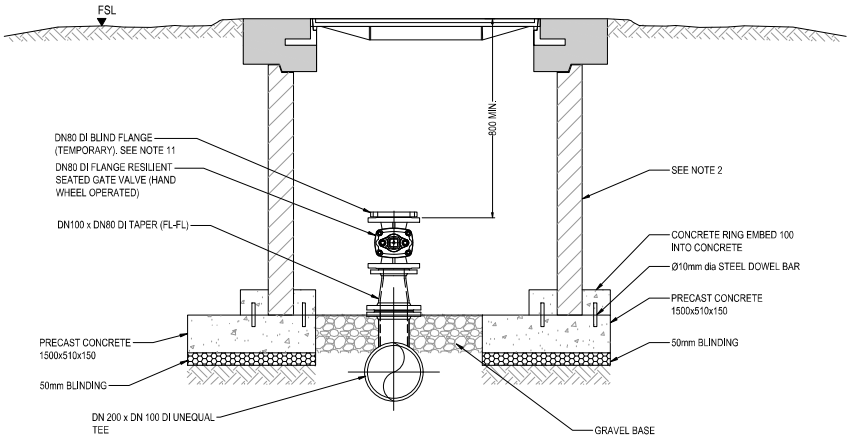

B SECTION

SCALE 1:10

FOR TENDER
NOT FOR CONSTRUCTION

No.	Revision	By	Chk	Appd	Date
T0	FOR TENDER	JA	PA	MF	10.10.19

Drawing Originator: Beca

Original Scale (A1) 1:10	Design	JA	10.10.19	Approved For Construction*
Reduced Scale (A3) 1:20	Drawn	PTS	10.10.19	
	Verifier	PA	10.10.19	
	Dwg Check	AS	10.10.19	Date

* Refer to Revision 1 for Original Signature

Client: CENTRAL HAWKE'S BAY DISTRICT COUNCIL

Project: OTANE TO WAIPAWA WASTEWATER RISING MAIN

Title: AIR VALVE DETAILS

Discipline: CIVIL

Drawing No. 3255239-CA-2001 Rev. T0

DO NOT SCALE

IF IN DOUBT ASK.

www.beca.com

Document No. 3255239-CA-2001.DWG

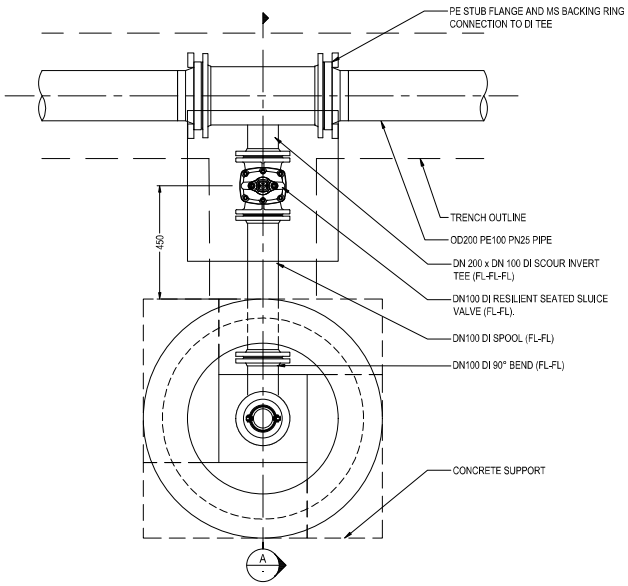

TYPE 1: SCOUR VALVE ASSEMBLY PLAN (PIPE IN BERM)

SCALE 1:10

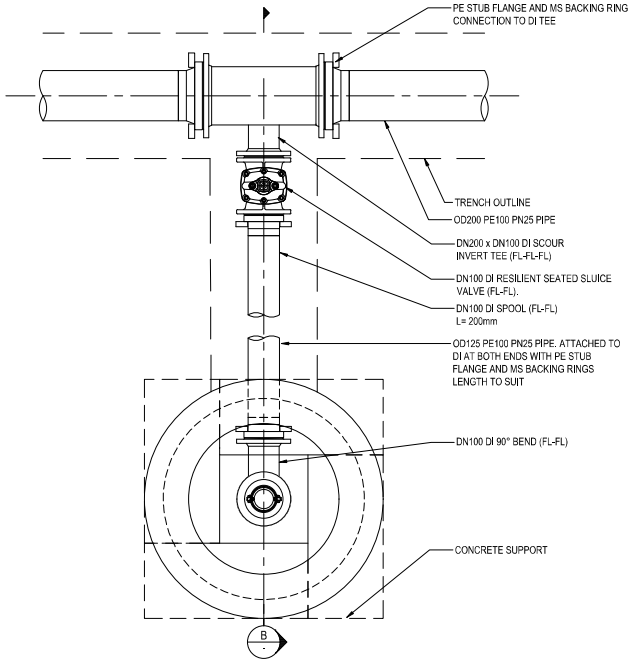

TYPE 2: SCOUR VALVE ASSEMBLY PLAN (PIPE IN ROAD)

SCALE 1:10

NOTES

1. FOR GENERAL NOTES REFER TO DRAWING 3255239-CA-0002.
2. LOCATIONS OF SCOUR INSTALLATION TO BE AS SHOWN ON PLAN AND LONGITUDINAL SECTION DRAWINGS
3. SCOUR VALVE ACCESS COVER TO BE TRAFFICABLE AND IN ACCORDANCE TO MRWA-W-302 FIGURE 302-B VALVE SURFACE ARRANGEMENT
4. TRAFFICABLE DN600 MAINTENANCE SHAFT (300mm LENGTH) AND CONCRETE PRECAST COVER ARRANGEMENT IN ACCORDANCE WITH MRWA-W-307 FIGURE 307-D TANKER CONNECTION POINT.
5. VALVE COVERS TO BE LOCKABLE.
6. DIRECTION OF VALVE OPENING TO BE IN ACCORDANCE WITH THE SPECIFICATION.
7. TANKER CONNECTION PIT TO BE LOCATED IN THE ROAD BERM NO GREATER THAN 1m FROM EDGE OF SEAL.

SCOUR VALVE		
ITEM NO.	CHAINAGE	PLAN
1	1160	CA-1004
2	1500	CA-1005
3	3200	CA-1010
4	3560	CA-1012
5	3860	CA-1013
6	4160	CA-1013
7	5020	CA-1016

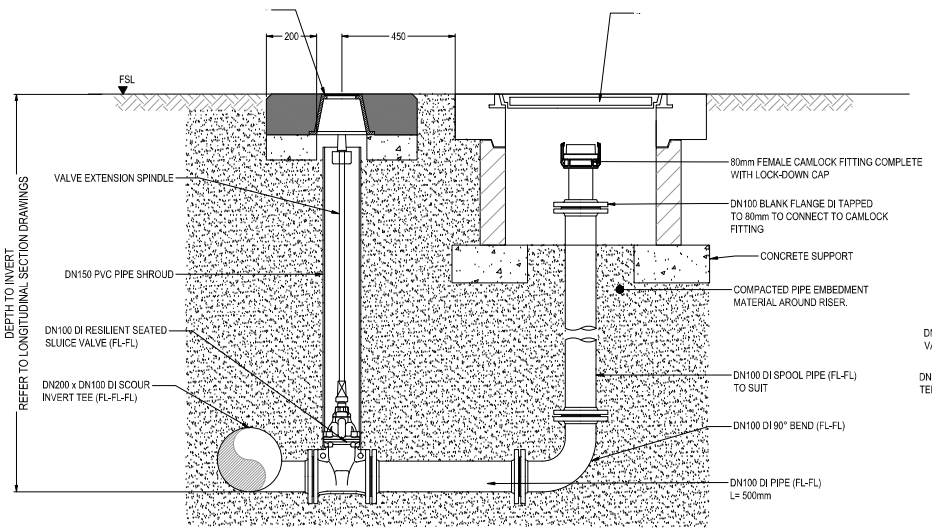

A SECTION

SCALE 1:10

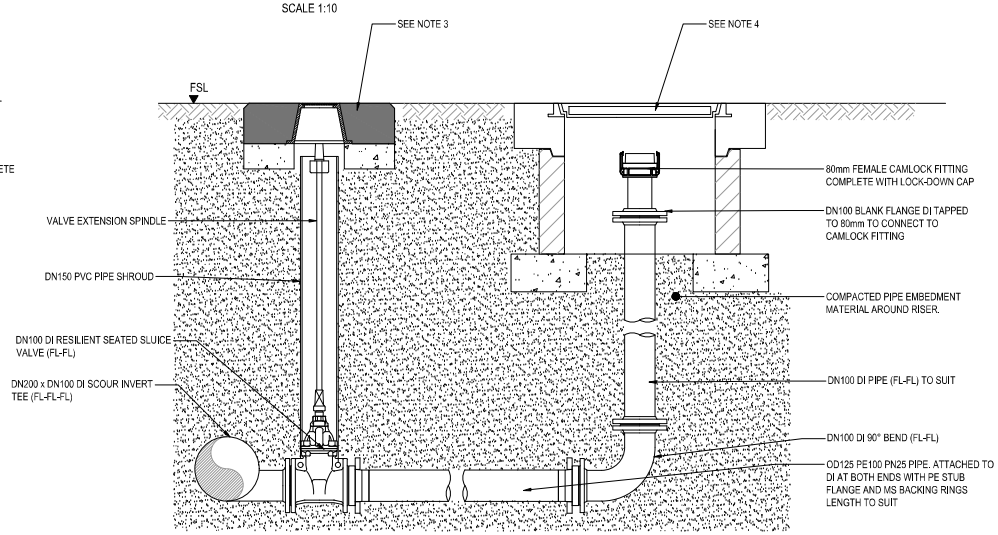

B SECTION

SCALE 1:10

FOR TENDER
NOT FOR CONSTRUCTION

No.	Revision	By	Chk	Appd	Date
T0	FOR TENDER	JA	PA	MF	10.10.19

Drawing Originator: Beca

Original Scale (A1) 1:10	Design	SH	10.10.19	Approved For Construction*
Reduced Scale (A3) 1:20	Drawn	PTS	10.10.19	
	Verifier	PA	10.10.19	
	Dwg Check	AS	10.10.19	Date

* Refer to Revision 1 for Original Signature

Client: CENTRAL HAWKE'S BAY DISTRICT COUNCIL

Project: OTANE TO WAIPAWA WASTEWATER RISING MAIN

Title: SCOUR DETAILS

Discipline: CIVIL

Drawing No.: 3255239-CA-2002 Rev. T0

DO NOT SCALE

IF IN DOUBT ASK.

www.beca.com

Document No.: 3255239-CA-2002.DWG

NOTES

1. FOR GENERAL NOTES REFER TO DRAWING 3255239-CA-0002.
2. COMPACTED TO 95% MDD IN ACCORDANCE WITH TNZ F/A SPECIFICATION. COMPACTED IN LAYERS TO ACHIEVE COMPACTION STANDARD.
3. COMPACTED TO 90% MDD IN ACOORDANCE WITH TNZ F/A SPECIFICATION. COMPACTED IN LAYERS TO ACHIVE COMPACTION STANDARD.

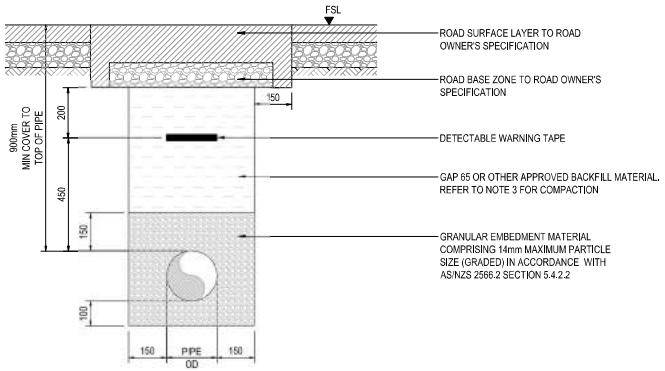

TRENCH DETAIL BY OPEN CUT FOR TRAFFICABLE AREA

SCALE 1:20

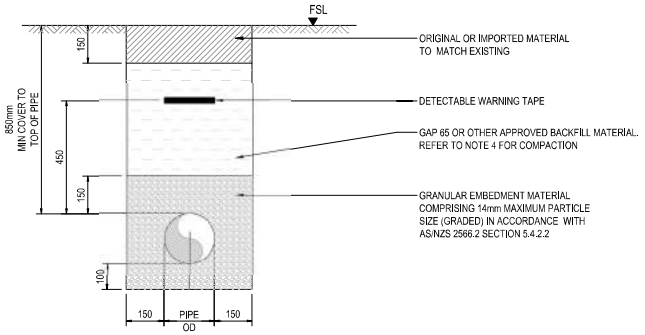

TRENCH DETAIL BY OPEN CUT FOR NON-TRAFFICABLE AREA

SCALE 1:20

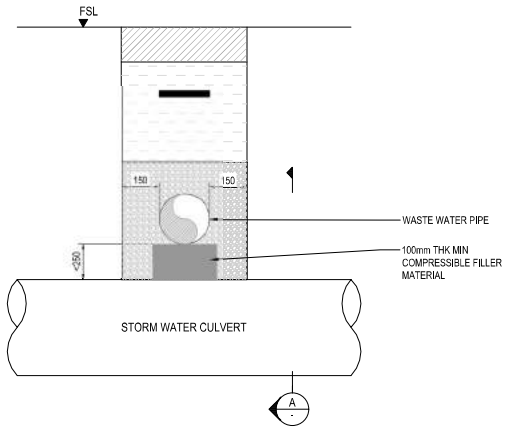

WASTE WATER RISING MAIN CROSSING OVER STORM WATER CULVERT WHERE VERTICAL OFFSET IS LESS THAN 250mm

SCALE 1:10

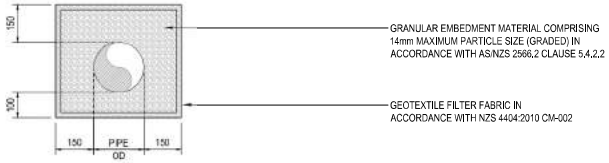

EMBEDMENT DETAIL FOR WATER LOGGED AREA

SCALE 1:10

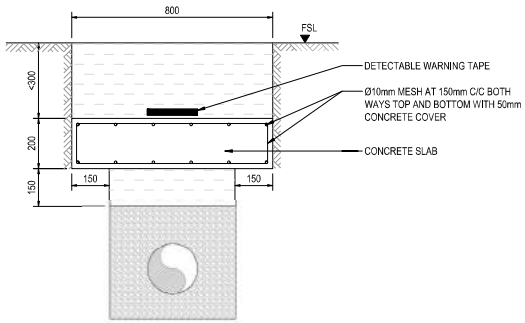

TRENCH DETAIL WITH PROTECTION SLAB

SCALE 1:10

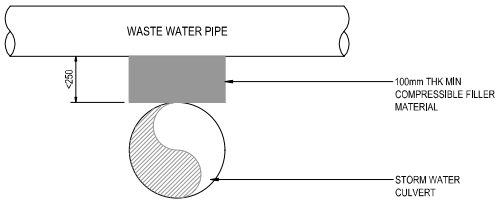

SECTION A

SCALE 1:10

FOR TENDER
NOT FOR CONSTRUCTION

No.	Revision	By	Chk	Appd	Date
T0	FOR TENDER	JA	PA	MF	10.10.19

Drawing Originator: Beca

Original Scale (A1) AS SHOWN	Design	JA	10.10.19	Approved For Construction*
	Drawn	PTS	10.10.19	
Reduced Scale (A3) AS SHOWN	Verifier	PA	10.10.19	
	Dwg Check	AS	10.10.19	Date

* Refer to Revision 1 for Original Signature

Client: CENTRAL HAWKE'S BAY DISTRICT COUNCIL

Project: OTANE TO WAIPAWA WASTEWATER RISING MAIN

Title: TRENCH DETAILS CROSS SECTION DETAILS

Discipline: CIVIL

Drawing No.: 3255239-CA-2003 Rev. T0

DO NOT SCALE

IF IN DOUBT ASK.

www.beca.com

Document No. 3255239-CA-2003.DWG

LOCALITY PLAN - STAGE 2
SCALE: NTS

DRAWING LIST		CHAINAGE
3255239-CA-0010	DRAWING LIST AND LOCALITY PLAN	
3255239-CA-0011	KEY PLAN AND GENERAL NOTES	
3255239-CA-1021	PLAN AND LONG SECTION SHEET 1 OF 11	0 TO 320
3255239-CA-1022	PLAN AND LONG SECTION SHEET 2 OF 11	320 TO 640
3255239-CA-1023	PLAN AND LONG SECTION SHEET 3 OF 11	640 TO 960
3255239-CA-1024	PLAN AND LONG SECTION SHEET 4 OF 11	960 TO 1280
3255239-CA-1025	PLAN AND LONG SECTION SHEET 5 OF 11	1280 TO 1600
3255239-CA-1026	PLAN AND LONG SECTION SHEET 6 OF 11	1600 TO 1920
3255239-CA-1027	PLAN AND LONG SECTION SHEET 7 OF 11	1920 TO 2240
3255239-CA-1028	PLAN AND LONG SECTION SHEET 8 OF 11	2240 TO 2560
3255239-CA-1029	PLAN AND LONG SECTION SHEET 9 OF 11	2560 TO 2880
3255239-CA-1030	PLAN AND LONG SECTION SHEET 10 OF 11	2880 TO 3200
3255239-CA-1031	PLAN AND LONG SECTION SHEET 11 OF 11	3200 TO 3481.39
3255239-CA-2011	ADDITIONAL AIR VALVE DETAILS	
3255239-CA-2012	SCOUR DETAILS	
3255239-CA-2013	TRENCH DETAILS AND CROSS SECTION DETAILS	
3255239-CA-2014	CONNECTION AND TEMPORARY TERMINATION DETAILS	

REFERENCE STANDARD DRAWINGS	
NZS 4404:2010 CM-001	EMBEDMENT AND TRENCH FILL TYPICAL ARRANGEMENT
NZS 4404:2010 CM-002	STANDARD EMBEDMENT FLEXIBLE AND RIGID PIPES
NZS 4404:2010 CM-003	BULKHEADS AND TRENCH STOP STANDARD DETAILS
NZS 4404:2010 WW-005	MAINTENANCE SHAFTS TMS & CONNECTION INSTALLATION
NZS 4404:2010 WW-006	MAINTENANCE SHAFTS TYPICAL MS COVER ARRANGEMENTS

Beca

Project No 3255239

OTANE TO WAIPAWA WASTEWATER RISING MAIN DETAILED DESIGN (STAGE 2)

DRAWING LIST AND LOCALITY PLAN

Prepared for

CENTRAL HAWKE'S BAY DISTRICT COUNCIL

By
Beca Ltd

03 AUG 2020

ORIGINAL DRAWING IN COLOUR

DETAILED DESIGN
NOT FOR CONSTRUCTION

Drawing No. 3255239-CA-0010 Rev.

www.beca.com

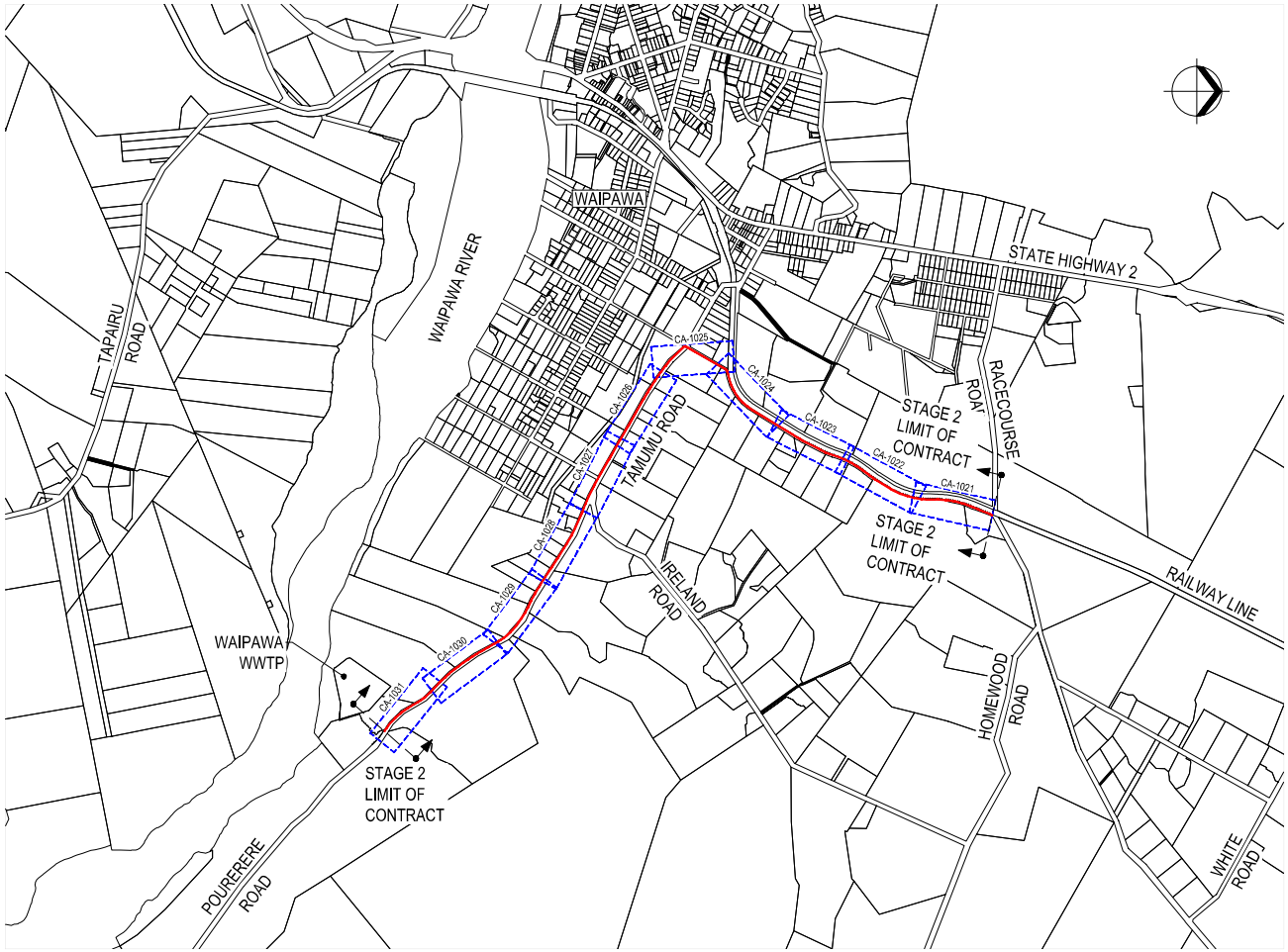

KEY PLAN - STAGE 2

SCALE: 1:10000

SERVICES LEGEND

- PROPOSED WASTE WATER
- SS — EXISTING SANITARY SEWER
- SW — SW — EXISTING STORMWATER
- W — EXISTING WATER MAIN
- X — X — X — SERVICE TO BE ABANDONED
- PARCEL BOUNDARY
- EXCLUSION ZONE
- WATER SUPPLY VALVE
- SCOUR VALVE
- AIR VALVE
- SHEET LIMIT
- PROPOSED RISING MAIN EASEMENT

UTILITIES LEGEND

- T — COMMUNICATION
- UP — U/G POWER
- OP — O/H POWER
- POWER POLE

HAZARD WARNINGS

A! EXISTING SANITARY SEWER/MANHOLE IN CLOSE PROXIMITY/CROSSING TO PROPOSED WORKS. CONTRACTOR TO MAINTAIN MINIMUM CLEARANCE BETWEEN UTILITIES.

B! EXISTING OVERHEAD POWER LINE IN PROXIMITY TO PROPOSED WORKS. POWER POLES TO BE IDENTIFIED PRIOR TO CONSTRUCTION. WARNING OF OPERATION WITH HEAVY MACHINERY FOR CONTACT WITH LIVE OVERHEAD LINES.

C! EXISTING WATER MAIN IN CLOSE PROXIMITY/CROSSING TO PROPOSED WORKS. CONTRACTOR TO MAINTAIN MINIMUM CLEARANCE BETWEEN UTILITIES.

D! EXISTING STORM WATER LINE/CULVERT IN CLOSE PROXIMITY/CROSSING TO PROPOSED WORKS. CONTRACTOR TO MAINTAIN MINIMUM CLEARANCE BETWEEN UTILITIES.

E! EXISTING TELECOMMUNICATION CABLE IN CLOSE PROXIMITY/CROSSING TO PROPOSED WORKS. CONTRACTOR TO MAINTAIN MINIMUM CLEARANCE BETWEEN UTILITIES.

F! EXISTING UNDERGROUND ELECTRIC CABLE IN CLOSE PROXIMITY/CROSSING TO PROPOSED WORKS. CONTRACTOR TO MAINTAIN MINIMUM CLEARANCE BETWEEN UTILITIES.

G! TREES IN CLOSE PROXIMITY WITH PROPOSED WORKS. CARE SHOULD BE TAKEN TO AVOID ANY DAMAGE TO TREES.

H! EXISTING ASBESTOS CEMENT (AC) WATER MAIN IN CLOSE PROXIMITY/CROSSING TO PROPOSED WORKS. CONTRACTOR TO MAINTAIN MINIMUM CLEARANCE BETWEEN UTILITIES.

I! RAILWAY IN CLOSE PROXIMITY WITH PROPOSED WORKS. CONTRACTOR MUST ENSURE THAT ALL PLANT OPERATING ADJACENT TO RAILWAY CORRIDOR DOES NOT ENCROACH WITHIN RAILWAY CORRIDOR TO AVOID OBSTRUCTING THE PASSING TRAIN.

GENERAL NOTES

1. COORDINATES FOR SETTING OUT ARE TO NEW ZEALAND TRANSVERSE MERCATOR (NZTM) 2000.
2. LEVELS ARE DERIVED FROM CENTRAL HAWKE'S BAY LIDAR DATA AND TRANSPOSED TO NEW ZEALAND VERTICAL DATUM (NZVD) 2016
3. ALL CONSTRUCTION WORKS TO BE IN ACCORDANCE WITH NZS 4404:2010.
4. UNLESS OTHERWISE NOTED, EXISTING SERVICES LOCATIONS HAVE BEEN SOURCED FROM DIAL BEFORE YOU DIG DATA AND ARE LIKELY TO BE INCOMPLETE AND INACCURATE.
5. CONTRACTOR TO CONFIRM THE LOCATION AND DEPTH OF ALL EXISTING SERVICES. ALL EXISTING SERVICES SHALL BE PHYSICALLY LOCATED PRIOR TO CONSTRUCTION. CONFLICTS OR INSUFFICIENT CLEARANCE SHALL BE REFERRED TO THE DESIGNER.
6. ALL INVERT LEVELS OF EXISTING UTILITIES SHOWN ON THE DRAWINGS ARE ASSUMED AND TO BE CONFIRMED PRIOR TO PROCEEDING WITH THE WORKS.
7. MINIMUM CLEARANCES FROM EXISTING SERVICES ARE TO BE MAINTAINED IN ACCORDANCE WITH SECTION 5.3.7.9 NZS 4404:2010.
8. ALL PIPES TO BE INSTALLED IN OPEN TRENCHES UNLESS OTHERWISE STATED.
9. VEHICLES ASSOCIATED WITH THE WORKS SHALL NOT DEPOSIT DIRT OR RUBBISH ONTO ROADS. ANY MATERIAL DEPOSITED SHALL BE PROMPTLY CLEANED UP WITHOUT CONTAMINATING ANY WATERWAY.
10. EXISTING FOOTPATH, KERB AND CHANNEL, PAVEMENT, NATURE STRIP, LANDSCAPE MOUNDING AND FENCE AFFECTED BY THE WORKS ARE TO BE REINSTATED IN ACCORDANCE WITH THE RELEVANT ROAD AUTHORITY SPECIFICATION.
11. MINIMUM COVER BELOW FINISHED SURFACE:
    -850MM UNDER NON TRAFFICABLE AREAS, ROAD BERM AND FOOTPATH
    -800MM UNDER TRAFFICABLE AREAS SUCH AS SEALED AND UN-SEALED CARRIAGEWAYS
12. COMPACTION TEST RESULTS ON TRENCH BACKFILL MUST BE PROVIDED TO THE CLIENT'S REPRESENTATIVE IN ACCORDANCE WITH THE SPECIFICATION.
13. PIPELINE TRENCH AND EMBEDMENT SHALL BE AS PER NZS 4404:2010 DRAWINGS CM-01 AND CM-02.
14. BULKHEADS AND TRENCHSTOPS SHALL BE PROVIDED FOR PIPE GRADES EQUAL OR GREATER THAN 5% OR AS INDICATED ON THE DRAWINGS. MINIMUM SPACING SHALL BE IN ACCORDANCE WITH TABLE 5.7 AS/NZS 2566.2:2002.
15. BULKHEADS AND TRENCHSTOPS DETAILS SHALL BE IN ACCORDANCE WITH NZS 4404:2010 DRAWING NO. CM-003.
16. CONTRACTOR TO CARRY OUT ALL ACCEPTANCE TESTING PROCEDURES AS PER NZS 4404:2010.
17. ALL BURIED FLANGE CONNECTIONS SHALL BE PROTECTED BY MASTIC FILLER, PETROLEUM TAPE AND POLYETHYLENE SLEEVING.
18. MINIMUM BENDING RADIUS FOR PIPE IS 33xOD.
19. CHANGES IN VERTICAL DIRECTION ARE WITHIN MINIMUM BEND RADIUS OF THE PIPE AND ARE TO BE ACHIEVED BY PIPE BEND UNLESS OTHERWISE STATED.
20. ALL BOLTS AND NUTS/FASTENERS SHALL BE MADE OF 316 STAINLESS STEEL.
21. SUPPLY AND INSTALLATION OF DN80 AIR VALVES ARE NOT PART OF THIS CONTRACT.

ORIGINAL DRAWING IN COLOUR

DETAILED DESIGN
NOT FOR CONSTRUCTION

No.	Revision	By	Chk	Appd	Date
B	DETAILED DESIGN	RP	PA	RS	03.08.20
A	FOR CLIENT REVIEW	RP	PA	RS	06.07.20

Drawing Originator: Beca

Original Scale (A1) 1:10000	Design	A.LEO	03.08.20	Approved For Construction*
	Drawn	R.PRAJAPATI	03.08.20	
Reduced Scale (A3) 1:20000	Verifier			
	Dwg Check			Date

* Refer to Revision 1 for Original Signature

Client: CENTRAL HAWKE'S BAY DISTRICT COUNCIL

Project: OTANE TO WAIPAWA WASTEWATER RISING MAIN

Title: KEY PLAN AND GENERAL NOTES

Discipline: CIVIL

Drawing No. 3255239-CA-0011 Rev. B

DO NOT SCALE

IF IN DOUBT ASK.

Document No. 3255239-CA-0011.DWG

www.beca.com

Drawing Plotted: 04 Aug 2020 9:11 am

NOTES

1. FOR GENERAL NOTES, LEGENDS AND HAZARD WARNINGS REFER TO DRAWING 3255239-CA-0011.
2. FOR AIR VALVE DETAILS, REFER TO 3255239-CA-2011.
3. FOR SCOUR DETAILS, REFER TO 3255239-CA-2012.
4. FOR TRENCH DETAILS, REFER TO 3255239-CA-2013.
5. ALL INVERT LEVELS OF EXISTING UTILITIES ARE ASSUMED AND TO BE CONFIRMED AT SITE.
6. PIPE TO BE CONNECTED TO EXISTING STAGE 1 OD200 PE100 PN25 PIPE VIA FLANGE CONNECTION.
7. FOR PIPE ALIGNMENT AFFECTED BY TREES, ARBORIST ADVICE SHALL BE OBTAINED ALONGSIDE CONSULTATION WITH THE COUNCIL ENGINEERS.

PLAN
SCALE 1:500

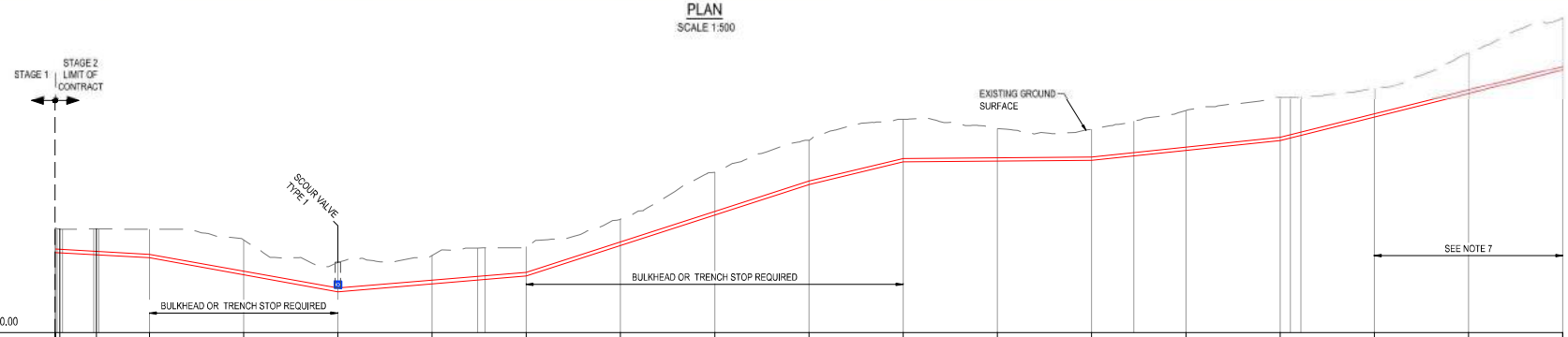

Datum R.L 110.00

EXISTING GROUND LEVEL	115.56		115.50	114.93	113.73	114.11	114.58	116.02	118.52	120.21	121.33	120.84	120.81	121.80	122.49	122.96	124.87	126.71			
PIPE INVERT	114.25		113.97	113.07	112.18	112.59	113.00	114.63	116.25	117.87	119.07	119.11	119.15	119.67	120.20	121.44	122.69	123.93			
DEPTH TO INVERT	1.30		1.53	1.85	1.56	1.51	1.57	1.40	2.27	2.34	2.27	1.73	1.66	2.13	2.29	1.51	2.18	2.78			
COVER DEPTH	1.11		1.34	1.66	1.37	1.33	1.38	1.21	2.08	2.16	2.08	1.54	1.47	1.94	2.10	1.32	1.99	2.59			
CHAINAGE	0.00	1.00	8.74	20.00	40.00	60.00	80.00	100.00	120.00	140.00	160.00	180.00	200.00	220.00	240.00	260.00	280.00	300.00	320.00		
PIPE SLOPE		-1.4%		-4.5%		2.1%		8.1%			6.0%	0.2%		2.6%			6.2%				
PIPE MATERIAL	OD200 PE100 PN25																				

LONGITUDINAL SECTION
SCALE HORIZONTAL 1:500
SCALE VERTICAL 1:125

ORIGINAL DRAWING IN COLOUR

DETAILED DESIGN
NOT FOR CONSTRUCTION

No.	Revision	By	Chk	Appd	Date
B	DETAILED DESIGN	RP	PA	RS	03.08.20
A	FOR CLIENT REVIEW	RP	PA	RS	06.07.20

Drawing Originator: Beca

Original Scale (A1) AS SHOWN	Design	A.LEO	03.08.20
	Drawn	R.PRAJAPATI	03.08.20
Reduced Scale (A3) AS SHOWN	Verifier		
	Dwg Check		
	* Refer to Revision 1 for Original Signature		Date

Approved For Construction*

Client: CENTRAL HAWKE'S BAY DISTRICT COUNCIL

Project: OTANE TO WAIPAWA WASTEWATER RISING MAIN

Title: PLAN AND LONG SECTION SHEET 01 OF 11

Discipline: CIVIL

Drawing No. 3255239-CA-1021 Rev. B

DO NOT SCALE

IF IN DOUBT ASK.

www.beca.com

Document No. 3255239-CA-1021.DWG

Drawing Plotted: 04 Aug 2020 9:03 am

NOTES

1. FOR GENERAL NOTES, LEGENDS AND HAZARD WARNINGS REFER TO DRAWING 3255239-CA-0011.
2. FOR AIR VALVE DETAILS, REFER TO 3255239-CA-2011.
3. FOR SCOUR DETAILS, REFER TO 3255239-CA-2012.
4. FOR TRENCH DETAILS, REFER TO 3255239-CA-2013.
5. ALL INVERT LEVELS OF EXISTING UTILITIES ARE ASSUMED AND TO BE CONFIRMED AT SITE.
6. FOR PIPE ALIGNMENT AFFECTED BY TREES, ARBORIST ADVICE SHALL BE OBTAINED ALONGSIDE CONSULTATION WITH THE COUNCIL ENGINEERS.

PLAN
SCALE 1:500

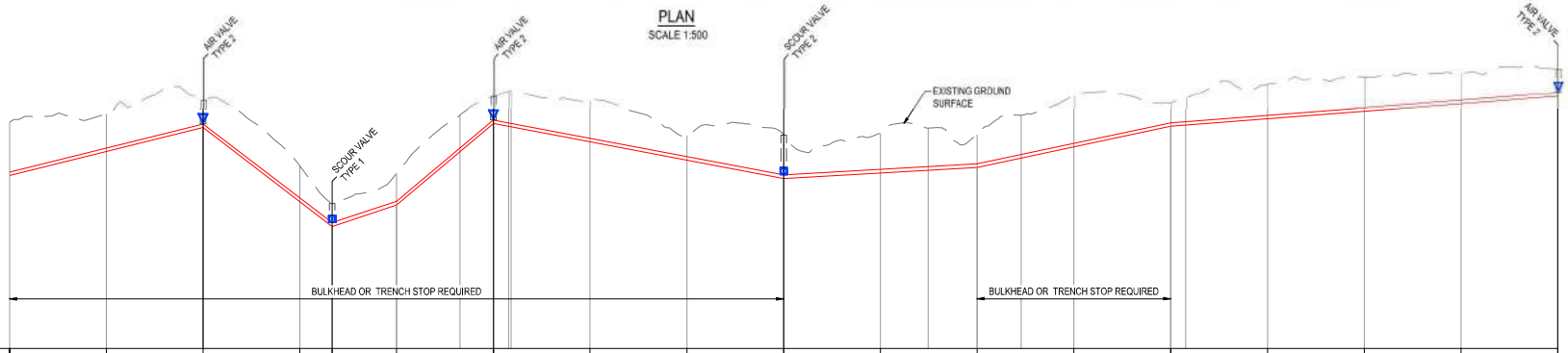

Datum R.L 115.00

EXISTING GROUND LEVEL	126.71	127.12	127.88	124.44	122.50	124.05	128.00	127.78	126.02	126.66	126.14	126.07	126.01	127.70	128.63	128.03	129.21	129.41
PIPE INVERT	123.93	125.18	126.42	122.59	121.31	122.42	126.63	125.68	124.73	123.79	124.07	124.36	125.42	126.48	126.87	127.25	127.64	128.03
DEPTH TO INVERT	2.78	1.94	1.46	1.85	1.19	1.64	1.37	2.10	1.28	2.27	2.06	1.70	2.59	1.22	1.76	1.78	1.57	1.39
COVER DEPTH	2.59	1.75	1.27	1.66	1.00	1.45	1.18	1.91	1.09	2.08	1.87	1.51	2.40	1.03	1.57	1.59	1.38	1.20
CHAINAGE	320.00	340.00	360.00	380.00	386.70	400.00	420.00	440.00	460.00	480.00	500.00	520.00	540.00	560.00	580.00	600.00	620.00	640.00
PIPE SLOPE		6.2%		-19.2%		8.3%	21.0%	-4.7%			1.4%		5.3%		1.9%			
PIPE MATERIAL	OD200 PE100 PN25																	

LONGITUDINAL SECTION
SCALE HORIZONTAL 1:500
SCALE VERTICAL 1:125

ORIGINAL DRAWING IN COLOUR

DETAILED DESIGN
NOT FOR CONSTRUCTION

No.	Revision	By	Chk	Appd	Date
B	DETAILED DESIGN	RP	PA	RS	03.08.20
A	FOR CLIENT REVIEW	RP	PA	RS	06.07.20

Drawing Originator: Beca

Original Scale (A1) AS SHOWN	Design	A.LEO	03.08.20
	Drawn	R.PRAJAPATI	03.08.20
Reduced Scale (A3) AS SHOWN	Verifier		
	Dwg Check		
	* Refer to Revision 1 for Original Signature		Date

Approved for Construction*

Client: CENTRAL HAWKE'S BAY DISTRICT COUNCIL

Project: OTANE TO WAIPAWA WASTEWATER RISING MAIN

Title: PLAN AND LONG SECTION SHEET 02 OF 11

Discipline: CIVIL

Drawing No. 3255239-CA-1022 Rev. B

DO NOT SCALE

IF IN DOUBT ASK.

www.beca.com

Document No. 3255239-CA-1022.DWG

Drawing Plotted: 04 Aug 2020 9:04 am

NOTES

1. FOR GENERAL NOTES, LEGENDS AND HAZARD WARNINGS REFER TO DRAWING 3255239-CA-0011.
2. FOR AIR VALVE DETAILS, REFER TO 3255239-CA-2011.
3. FOR SCOUR DETAILS, REFER TO 3255239-CA-2012.
4. FOR TRENCH DETAILS, REFER TO 3255239-CA-2013.
5. ALL INVERT LEVELS OF EXISTING UTILITIES ARE ASSUMED AND TO BE CONFIRMED AT SITE.
6. FOR PIPE ALIGNMENT AFFECTED BY TREES, ARBORIST ADVICE SHALL BE OBTAINED ALONGSIDE CONSULTATION WITH THE COUNCIL ENGINEERS.

PLAN
SCALE 1:500

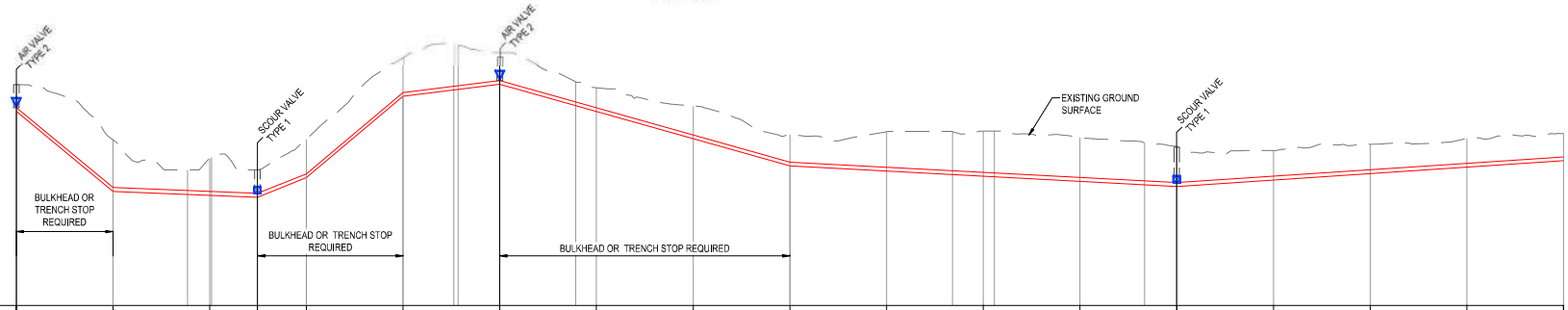

Datum R.L 118.00

EXISTING GROUND LEVEL	129.41	126.57	125.59	125.00	126.59	130.79	131.02	129.25	128.31	126.83	126.98	127.01	126.68	126.20	126.00	126.33	126.63	126.87
PIPE INVERT	128.03	123.90	123.70	123.60	124.61	128.80	129.43	128.02	126.61	125.21	124.94	124.68	124.42	124.15	124.48	124.82	125.15	125.48
DEPTH TO INVERT	1.39	2.67	1.89	1.40	1.98	1.98	1.59	1.23	1.69	1.62	2.04	2.33	2.26	2.05	1.52	1.51	1.48	1.39
COVER DEPTH	1.20	2.48	1.70	1.21	1.79	1.80	1.40	1.04	1.50	1.43	1.85	2.14	2.07	1.86	1.33	1.32	1.29	1.20
CHAINAGE	640.00	660.00	680.00	689.89	700.00	720.00	740.00	760.00	780.00	800.00	820.00	840.00	860.00	880.00	900.00	920.00	940.00	960.00
PIPE SLOPE		-20.6%	-1.0%		10.0%	21.0%	3.1%	-7.0%			-1.3%				1.7%			
PIPE MATERIAL	OD200 PE100 PN25																	

LONGITUDINAL SECTION
SCALE HORIZONTAL 1:500
SCALE VERTICAL 1:125

ORIGINAL DRAWING IN COLOUR

DETAILED DESIGN
NOT FOR CONSTRUCTION

No.	Revision	By	Chk	Appd	Date
B	DETAILED DESIGN	RP	PA	RS	03.08.20
A	FOR CLIENT REVIEW	RP	PA	RS	06.07.20

Drawing Originator: Beca

Original Scale (A1) AS SHOWN	Design	A.LEO	03.08.20
	Drawn	R.PRAJAPATI	03.08.20
Reduced Scale (A3) AS SHOWN	Verifier		
	Dwg Check		
	* Refer to Revision 1 for Original Signature		Date

Approved For Construction*

Client: CENTRAL HAWKE'S BAY DISTRICT COUNCIL

Project: OTANE TO WAIPAWA WASTEWATER RISING MAIN

Title: PLAN AND LONG SECTION SHEET 03 OF 11

Discipline: CIVIL

Drawing No. 3255239-CA-1023 Rev. B

DO NOT SCALE

IF IN DOUBT ASK.

www.beca.com

Document No. 3255239-CA-1023.DWG

Drawing Plotted: 04 Aug 2020 9:07 am

NOTES

1. FOR GENERAL NOTES, LEGENDS AND HAZARD WARNINGS REFER TO DRAWING 3255239-CA-0011.
2. FOR AIR VALVE DETAILS, REFER TO 3255239-CA-2011.
3. FOR SCOUR DETAILS, REFER TO 3255239-CA-2012.
4. FOR TRENCH AND CULVERT CROSSING DETAILS, REFER TO 3255239-CA-2013.
5. ALL INVERT LEVELS OF EXISTING UTILITIES ARE ASSUMED AND TO BE CONFIRMED AT SITE.
6. FOR PIPE ALIGNMENT AFFECTED BY TREES, ARBORIST ADVICE SHALL BE OBTAINED ALONGSIDE CONSULTATION WITH THE COUNCIL ENGINEERS.

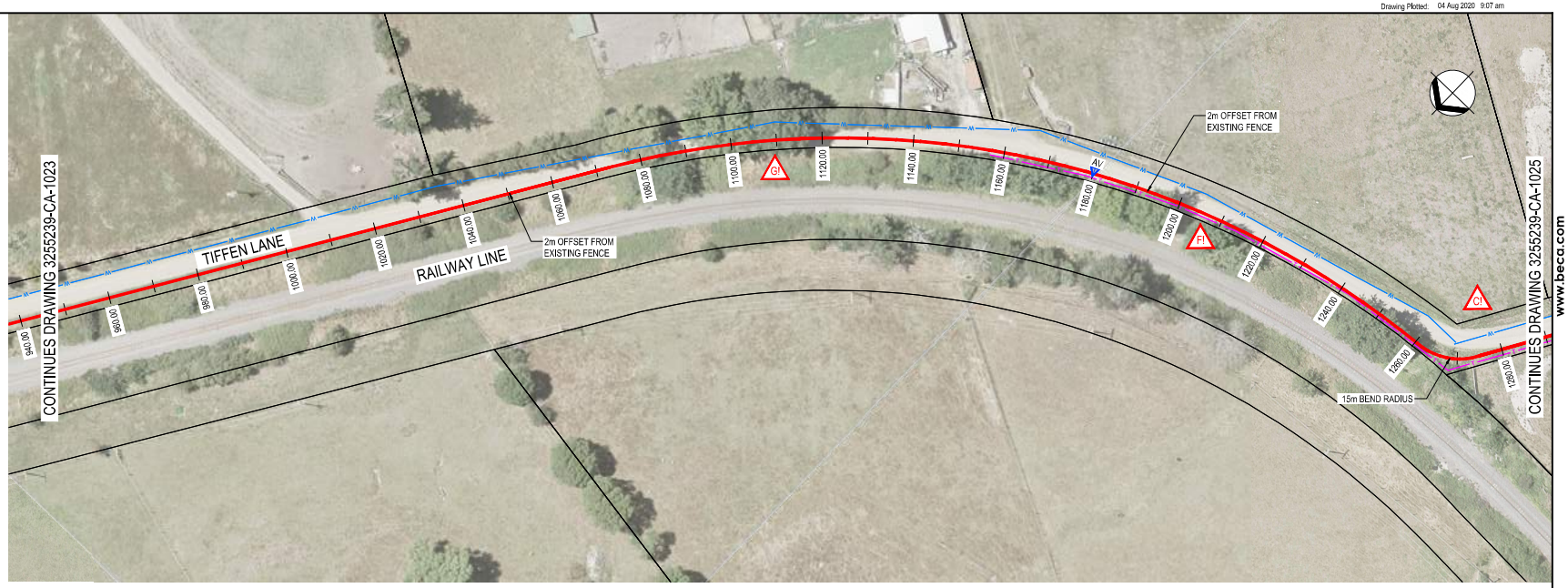

PLAN

SCALE 1:500

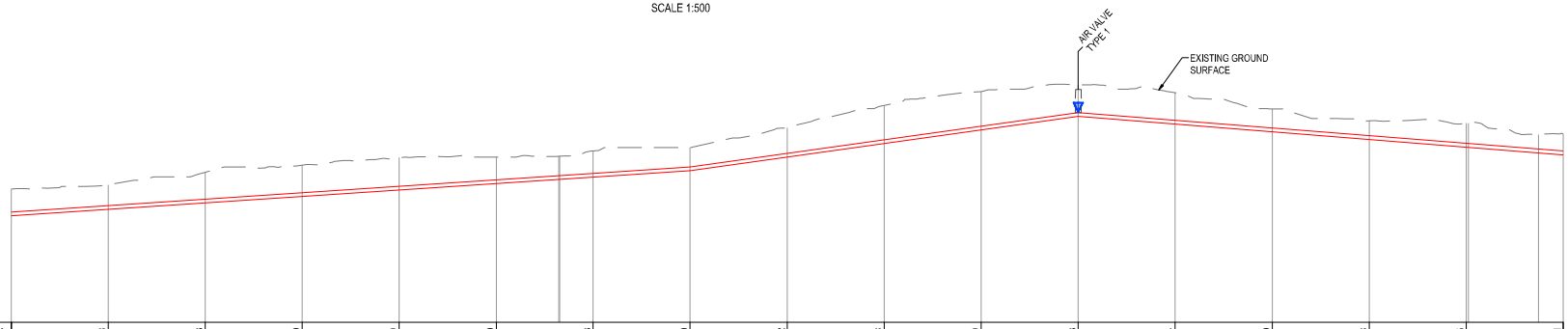

Datum R.L 120.00

EXISTING GROUND LEVEL	126.87	127.08	127.73	128.10	128.49	128.50	128.83	129.00	130.02	131.18	131.89	132.23	131.84	131.00	130.38	130.25	129.71		
PIPE INVERT	125.48	125.92	126.15	126.48	126.81	127.15	127.48	127.81	128.51	129.21	129.91	130.61	130.21	129.92	129.42	129.03	128.63		
DEPTH TO INVERT	1.39	1.26	1.58	1.62	1.68	1.36	1.35	1.19	1.51	1.97	1.97	1.62	1.62	1.18	0.96	1.23	1.08		
COVER DEPTH	1.20	1.07	1.39	1.43	1.49	1.17	1.16	1.00	1.32	1.78	1.79	1.43	1.43	0.99	0.77	1.04	0.90		
CHAINAGE	960.00	980.00	1000.00	1020.00	1040.00	1060.00	1080.00	1100.00	1120.00	1140.00	1160.00	1180.00	1200.00	1220.00	1240.00	1260.00	1280.00		
PIPE SLOPE	1.7%								3.5%				-2.0%						
PIPE MATERIAL	OD200 PE100 PN25																		

LONGITUDINAL SECTION

SCALE HORIZONTAL 1:500

SCALE VERTICAL 1:125

ORIGINAL DRAWING IN COLOUR

DETAILED DESIGN
NOT FOR CONSTRUCTION

No.	Revision	By	Chk	Appd	Date
B	DETAILED DESIGN	RP	PA	RS	03.08.20
A	FOR CLIENT REVIEW	RP	PA	RS	06.07.20

Drawing Originator: Beca

Original Scale (A1) AS SHOWN; Reduced Scale (A3) AS SHOWN

Design	A.LEO	03.08.20	Approved For Construction*
Drawn	R.PRAJAPATI	03.08.20	
Verifier			
Dwg Check			Date

* Refer to Revision 1 for Original Signature

Client: CENTRAL HAWKE'S BAY DISTRICT COUNCIL

Project: OTANE TO WAIPAWA WASTEWATER RISING MAIN

Title: PLAN AND LONG SECTION SHEET 04 OF 11

Discipline: CIVIL

Drawing No.: 3255239-CA-1024 Rev.: B

DO NOT SCALE

IF IN DOUBT ASK.

www.beca.com

Document No: 3255239-CA-1024.DWG

Drawing Plotted: 04 Aug 2020 9:08 am

NOTES

1. FOR GENERAL NOTES, LEGENDS AND HAZARD WARNINGS REFER TO DRAWING 3255239-CA-0011.
2. FOR AIR VALVE DETAILS, REFER TO 3255239-CA-2011.
3. FOR SCOUR DETAILS, REFER TO 3255239-CA-2012.
4. FOR TRENCH DETAILS, REFER TO 3255239-CA-2013.
5. ALL INVERT LEVELS OF EXISTING UTILITIES ARE ASSUMED AND TO BE CONFIRMED AT SITE.
6. FOR PIPE ALIGNMENT AFFECTED BY TREES, ARBORIST ADVICE SHALL BE OBTAINED ALONGSIDE CONSULTATION WITH THE COUNCIL ENGINEERS.

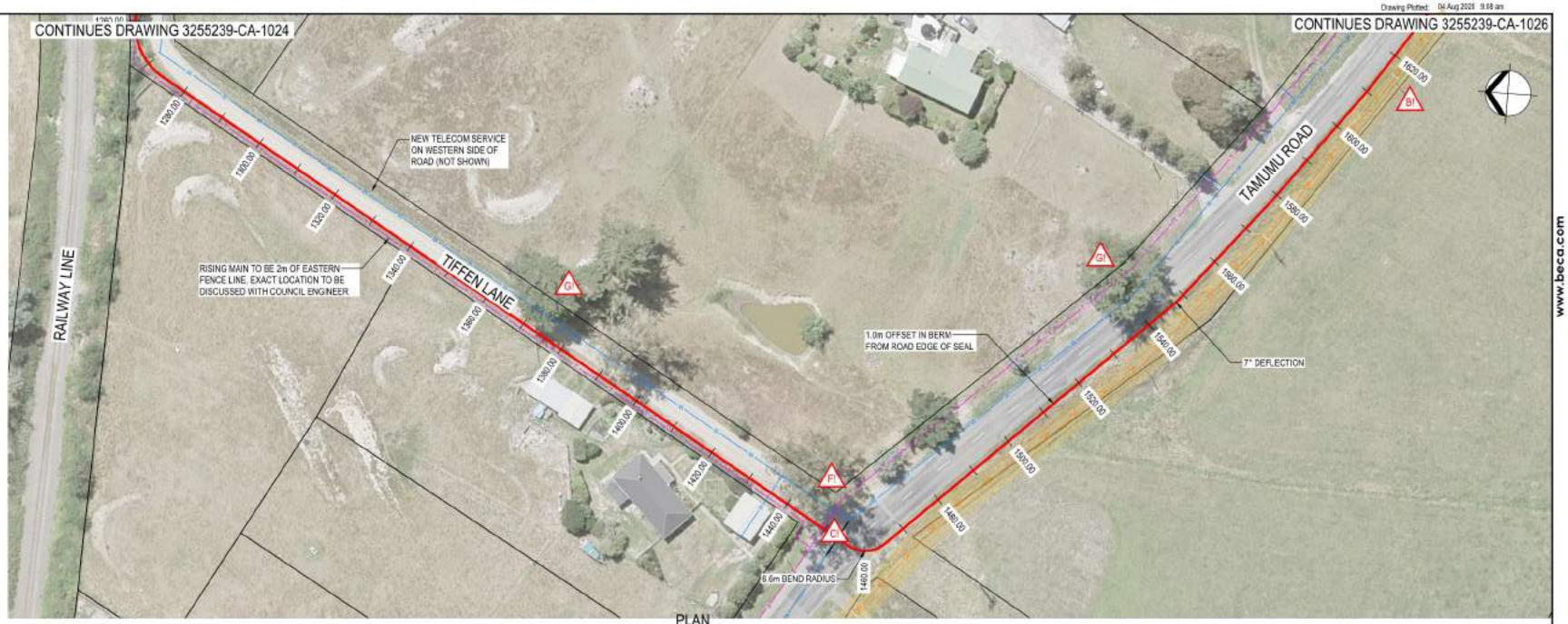

PLAN
SCALE 1:500

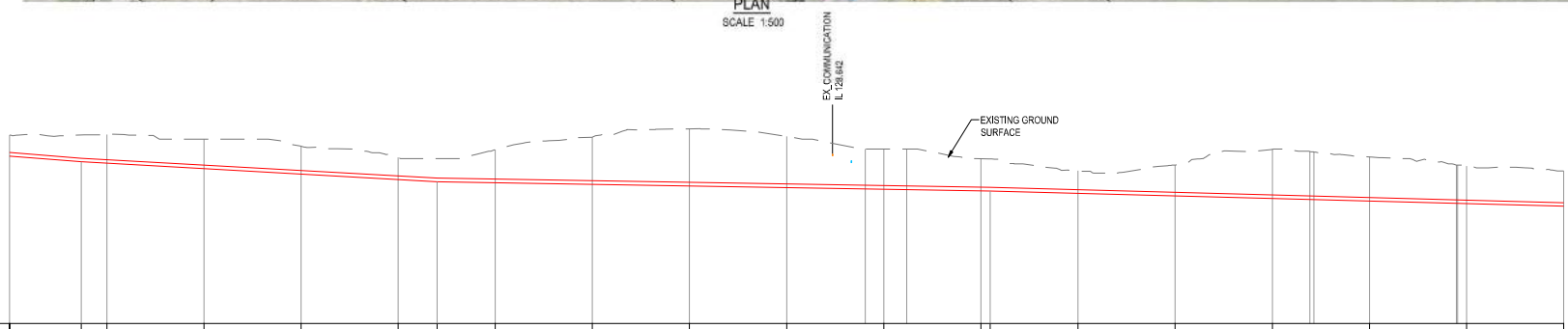

Datum R.L 120.00

EXISTING GROUND LEVEL	129.71	129.72	129.75	129.50	129.14	128.56	128.50	128.96	129.60	130.03	129.65	129.00	128.49	128.48	127.88	128.17	128.98	128.59	128.12	127.87
PIPE INVERT	128.63	128.34	128.26	127.98	127.70	127.42	127.31	127.26	127.18	127.09	127.01	126.92	126.84	126.83	126.71	126.58	126.44	126.31	126.18	126.05
DEPTH TO INVERT	1.08	1.38	1.48	1.52	1.43	1.14	1.19	1.70	2.43	2.94	2.64	2.08	1.65	1.65	1.17	1.59	2.54	2.28	1.94	1.82
COVER DEPTH	0.90	1.19	1.29	1.33	1.24	0.95	1.00	1.51	2.24	2.75	2.45	1.89	1.46	1.46	0.98	1.40	2.35	2.09	1.75	1.63
CHAINAGE	1280.00	1294.71	1300.00	1320.00	1340.00	1360.00	1368.02	1380.00	1400.00	1420.00	1440.00	1460.00	1480.00	1481.97	1500.00	1520.00	1540.00	1560.00	1580.00	1600.00
PIPE SLOPE	-2.0%		-1.4%					-0.4%							-0.7%					
PIPE MATERIAL	OD200 PE100 PN25																			

LONGITUDINAL SECTION

SCALE HORIZONTAL 1:500
SCALE VERTICAL 1:125

ORIGINAL DRAWING IN COLOUR

DETAILED DESIGN
NOT FOR CONSTRUCTION

No.	Revision	By	Chk	Appd	Date
B	DETAILED DESIGN	RP	PA	RS	03.08.20
A	FOR CLIENT REVIEW	RP	PA	RS	06.07.20

Drawing Originator: Beca

Original Scale (A1) AS SHOWN	Design	A.LEO	03.08.20
	Drawn	R.PRAJAPATI	03.08.20
Reduced Scale (A3) AS SHOWN	Verifier		
	Dwg Check		

Approved For Construction* Date
* Refer to Revision 1 for Original Signature

Client: CENTRAL HAWKE'S BAY DISTRICT COUNCIL

Project: OTANE TO WAIPAWA WASTEWATER RISING MAIN

Title: PLAN AND LONG SECTION SHEET 05 OF 11

Discipline: CIVIL

Drawing No. 3255239-CA-1025 Rev. B

DO NOT SCALE

IF IN DOUBT ASK.

www.beca.com

Document No. 3255239-CA-1025.DWG

Drawing Plotted: 04 Aug 2020 9:10 am

NOTES

1. FOR GENERAL NOTES, LEGENDS AND HAZARD WARNINGS REFER TO DRAWING 3255239-CA-0011.
2. FOR AIR VALVE DETAILS, REFER TO 3255239-CA-2011.
3. FOR SCOUR DETAILS, REFER TO 3255239-CA-2012.
4. FOR CULVERT CROSSING DETAILS, REFER TO WASTEWATER RISING MAIN CROSSING OVER STORMWATER CULVERT 3255239-CA-2013 .
5. ALL INVERT LEVELS OF EXISTING UTILITIES ARE ASSUMED AND TO BE CONFIRMED AT SITE.

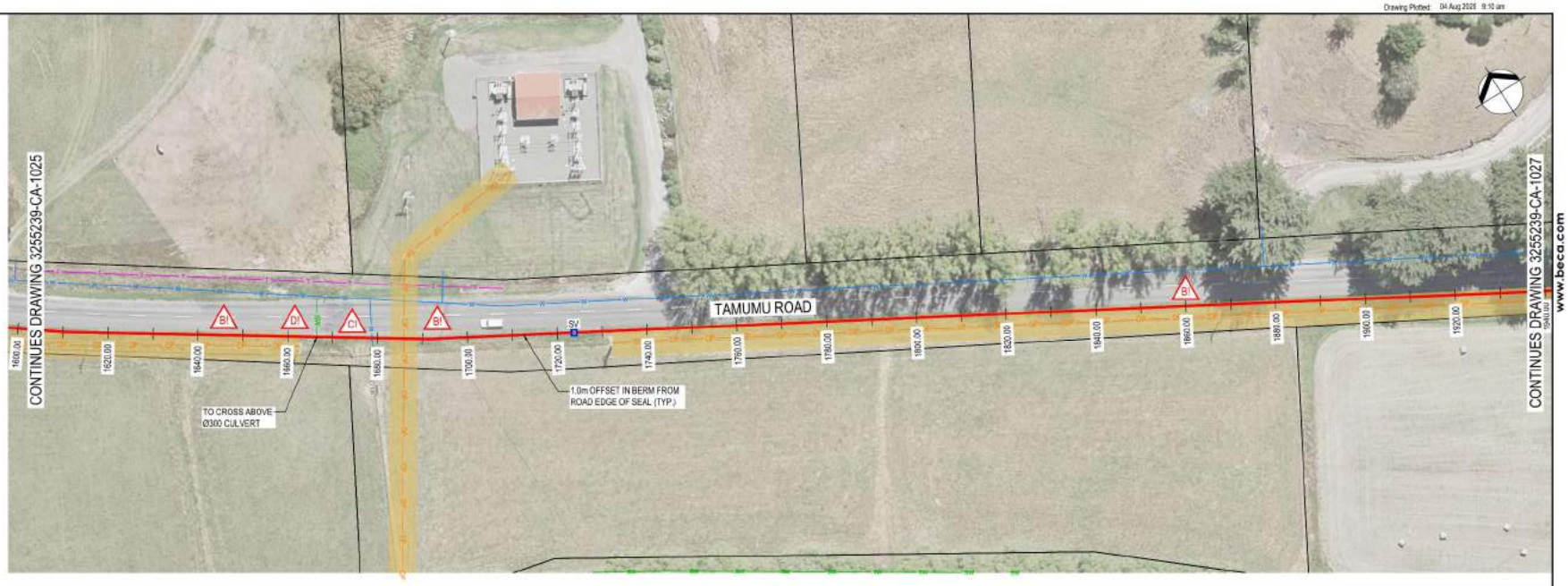

PLAN
SCALE 1:500

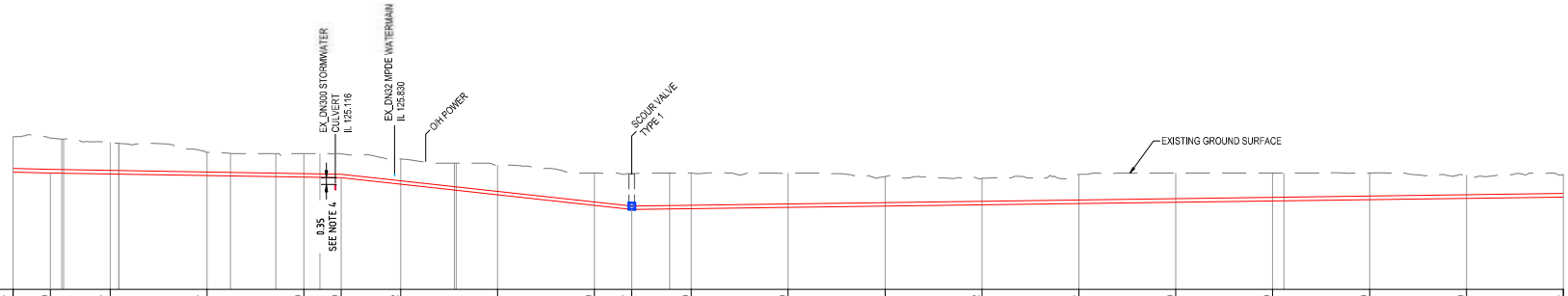

Datum R.L 120.00

EXISTING GROUND LEVEL	127.87	127.80	127.57	127.07	127.00	126.99	126.72	126.41	126.00	125.97	126.00	126.00	126.81	125.72	125.94	126.00	126.00	126.00	125.90	125.94				
PIPE INVERT	126.05	125.99	125.94	125.86	125.78	125.75	125.42	124.87	124.32	124.11	124.15	124.22	124.29	124.36	124.42	124.49	124.56	124.63	124.69	124.76				
DEPTH TO INVERT	1.82	1.81	1.63	1.20	1.22	1.24	1.31	1.54	1.68	1.86	1.85	1.78	1.52	1.37	1.52	1.51	1.44	1.37	1.20	1.18				
COVER DEPTH	1.63	1.62	1.44	1.01	1.03	1.05	1.12	1.35	1.49	1.67	1.66	1.59	1.33	1.18	1.33	1.32	1.25	1.18	1.01	0.99				
CHAINAGE	1600.00	1607.70	1620.00	1640.00	1660.00	1667.70	1680.00	1700.00	1720.00	1727.70	1740.00	1760.00	1780.00	1800.00	1820.00	1840.00	1860.00	1880.00	1900.00	1920.00				
PIPE SLOPE		-0.4%				-2.7%					0.3%													
PIPE MATERIAL	OD200 PE100 PN25																							

LONGITUDINAL SECTION
SCALE HORIZONTAL 1:500
SCALE VERTICAL 1:125

ORIGINAL DRAWING IN COLOUR

DETAILED DESIGN
NOT FOR CONSTRUCTION

No.	Revision	By	Chk	Appd	Date
B	DETAILED DESIGN	RP	PA	RS	03.08.20
A	FOR CLIENT REVIEW	RP	PA	RS	06.07.20

Drawing Originator: Beca

Original Scale (A1) AS SHOWN	Design	A.LEO	03.08.20
	Drawn	R.PRAJAPATI	03.08.20
Reduced Scale (A3) AS SHOWN	Verifier		
	Dwg Check		
	* Refer to Revision 1 for Original Signature		

Approved for Construction* Date

Client: CENTRAL HAWKE'S BAY DISTRICT COUNCIL

Project: OTANE TO WAIPAWA WASTEWATER RISING MAIN

Title: PLAN AND LONG SECTION SHEET 06 OF 11

Discipline: CIVIL

Drawing No. 3255239-CA-1026 Rev. B

DO NOT SCALE

IF IN DOUBT ASK.

www.beca.com

Document No. 3255239-CA-1026.DWG

Drawing Plotted: 04 Aug 2020 9:11 am

NOTES

1. FOR GENERAL NOTES, LEGENDS AND HAZARD WARNINGS REFER TO DRAWING 3255239-CA-0011.
2. FOR AIR VALVE DETAILS, REFER TO 3255239-CA-2011.
3. FOR SCOUR DETAILS, REFER TO 3255239-CA-2012.
4. FOR TRENCH DETAILS, REFER TO 3255239-CA-2013.
5. ALL INVERT LEVELS OF EXISTING UTILITIES ARE ASSUMED AND TO BE CONFIRMED AT SITE.

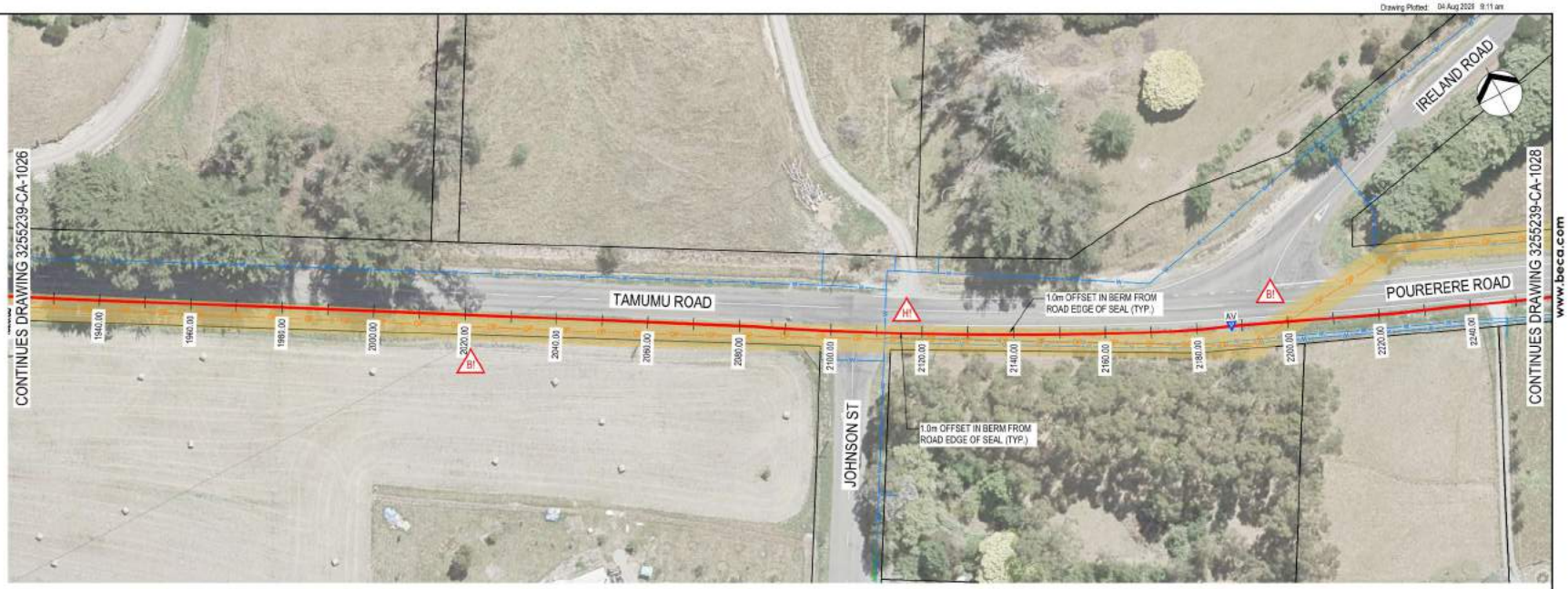

PLAN
SCALE 1:500

Datum R.L 120.00

EXISTING GROUND LEVEL	125.94	126.33	126.51	126.38	126.42	126.56	126.90	126.75	126.78	126.73	127.00	127.13	127.15	127.04	127.08	127.02	126.55	126.18
PIPE INVERT	124.76	124.83	124.90	124.96	125.03	125.10	125.17	125.23	125.30	125.37	125.44	125.50	125.57	125.64	125.67	125.46	125.14	124.81
DEPTH TO INVERT	1.18	1.50	1.61	1.42	1.39	1.46	1.74	1.52	1.48	1.36	1.56	1.62	1.58	1.40	1.42	1.56	1.42	1.37
COVER DEPTH	0.99	1.31	1.42	1.23	1.20	1.27	1.55	1.33	1.29	1.17	1.37	1.43	1.39	1.21	1.23	1.37	1.23	1.18
CHAINAGE	1920.00	1940.00	1960.00	1980.00	2000.00	2020.00	2040.00	2060.00	2080.00	2100.00	2120.00	2140.00	2160.00	2180.00	2187.70	2200.00	2220.00	2240.00
PIPE SLOPE	0.3%															-1.6%		
PIPE MATERIAL	OD200 PE100 PN25																	

LONGITUDINAL SECTION
SCALE HORIZONTAL 1:500
SCALE VERTICAL 1:125

ORIGINAL DRAWING IN COLOUR

DETAILED DESIGN
NOT FOR CONSTRUCTION

No.	Revision	By	Chk	Appd	Date
B	DETAILED DESIGN	RP	PA	RS	03.08.20
A	FOR CLIENT REVIEW	RP	PA	RS	06.07.20

Drawing Originator: Beca

Original Scale (A1) AS SHOWN	Design	A.LEO	03.08.20
	Drawn	R.PRAJAPATI	03.08.20
Reduced Scale (A3) AS SHOWN	Verifier		
	Dwg Check		
	* Refer to Revision 1 for Original Signature		Date

Approved For Construction*

Client: CENTRAL HAWKE'S BAY DISTRICT COUNCIL

Project: OTANE TO WAIPAWA WASTEWATER RISING MAIN

Title: PLAN AND LONG SECTION SHEET 07 OF 11

Discipline: CIVIL

Drawing No. 3255239-CA-1027 Rev. B

DO NOT SCALE

IF IN DOUBT ASK.

www.beca.com

Document No. 3255239-CA-1027.DWG

Drawing Plotted: 04 Aug 2020 9:13 am

NOTES

1. FOR GENERAL NOTES, LEGENDS AND HAZARD WARNINGS REFER TO DRAWING 3255239-CA-0011.
2. FOR AIR VALVE DETAILS, REFER TO 3255239-CA-2011.
3. FOR SCOUR DETAILS, REFER TO 3255239-CA-2012.
4. FOR TRENCH DETAILS, REFER TO 3255239-CA-2013.
5. ALL INVERT LEVELS OF EXISTING UTILITIES ARE ASSUMED AND TO BE CONFIRMED AT SITE.

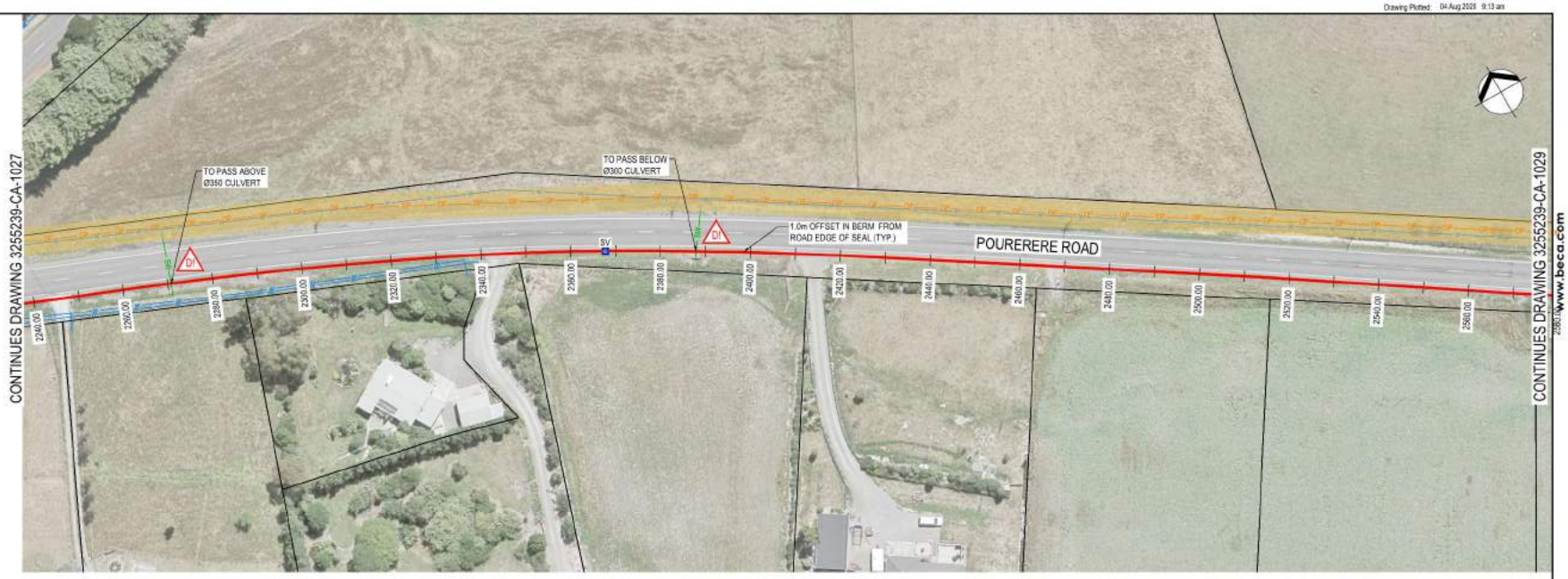

PLAN
SCALE 1:500

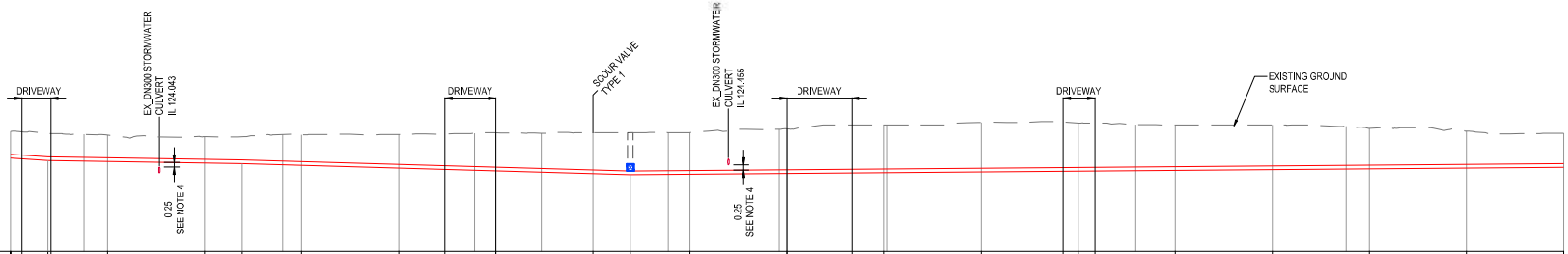

Datum R.L. 120.00

EXISTING GROUND LEVEL	126.18	126.07	125.99	125.90	125.90	126.00	126.01	126.11	126.11	126.11	126.12	126.31	126.50	126.65	126.62	126.50	126.50	126.34	126.20	126.08
PIPE INVERT	124.81	124.68	124.63	124.55	124.52	124.43	124.29	124.15	124.01	123.95	123.98	124.02	124.06	124.10	124.14	124.18	124.22	124.26	124.30	124.34
DEPTH TO INVERT	1.37	1.39	1.36	1.35	1.38	1.57	1.72	1.96	2.10	2.15	2.14	2.29	2.44	2.55	2.48	2.32	2.28	2.08	1.90	1.74
COVER DEPTH	1.18	1.20	1.17	1.16	1.19	1.38	1.53	1.77	1.91	1.96	1.95	2.10	2.25	2.36	2.29	2.13	2.09	1.89	1.71	1.55
CHAINAGE	2240.00	2247.70	2260.00	2280.00	2287.70	2300.00	2320.00	2340.00	2360.00	2367.70	2380.00	2400.00	2420.00	2440.00	2460.00	2480.00	2500.00	2520.00	2540.00	2560.00
PIPE SLOPE			-0.4%			-0.7%					0.2%									
PIPE MATERIAL	OD200 PE100 PN25																			

LONGITUDINAL SECTION
SCALE HORIZONTAL 1:500
SCALE VERTICAL 1:125

ORIGINAL DRAWING IN COLOUR

DETAILED DESIGN
NOT FOR CONSTRUCTION

No.	Revision	By	Chk	Appd	Date
B	DETAILED DESIGN	RP	PA	RS	03.08.20
A	FOR CLIENT REVIEW	RP	PA	RS	06.07.20

Drawing Originator: Beca

Original Scale (A1) AS SHOWN	Design	A.LEO	03.08.20	Approved For Construction*
	Drawn	R.PRAJAPATI	03.08.20	
Reduced Scale (A3) AS SHOWN	Verifier			
	Dwg Check			Date

* Refer to Revision 1 for Original Signature

Client: CENTRAL HAWKE'S BAY DISTRICT COUNCIL

Project: OTANE TO WAIPAWA WASTEWATER RISING MAIN

Title: PLAN AND LONG SECTION SHEET 08 OF 11

Discipline: CIVIL

Drawing No. 3255239-CA-1028 Rev. B

DO NOT SCALE

IF IN DOUBT ASK.

www.beca.com

Document No. 3255239-CA-1028.DWG

Drawing Plotted: 04 Aug 2020 9:15 am

NOTES

1. FOR GENERAL NOTES, LEGENDS AND HAZARD WARNINGS REFER TO DRAWING 3255239-CA-0011.
2. FOR AIR VALVE DETAILS, REFER TO 3255239-CA-2011.
3. FOR SCOUR DETAILS, REFER TO 3255239-CA-2012.
4. FOR TRENCH DETAILS, REFER TO 3255239-CA-2013.
5. ALL INVERT LEVELS OF EXISTING UTILITIES ARE ASSUMED AND TO BE CONFIRMED AT SITE.

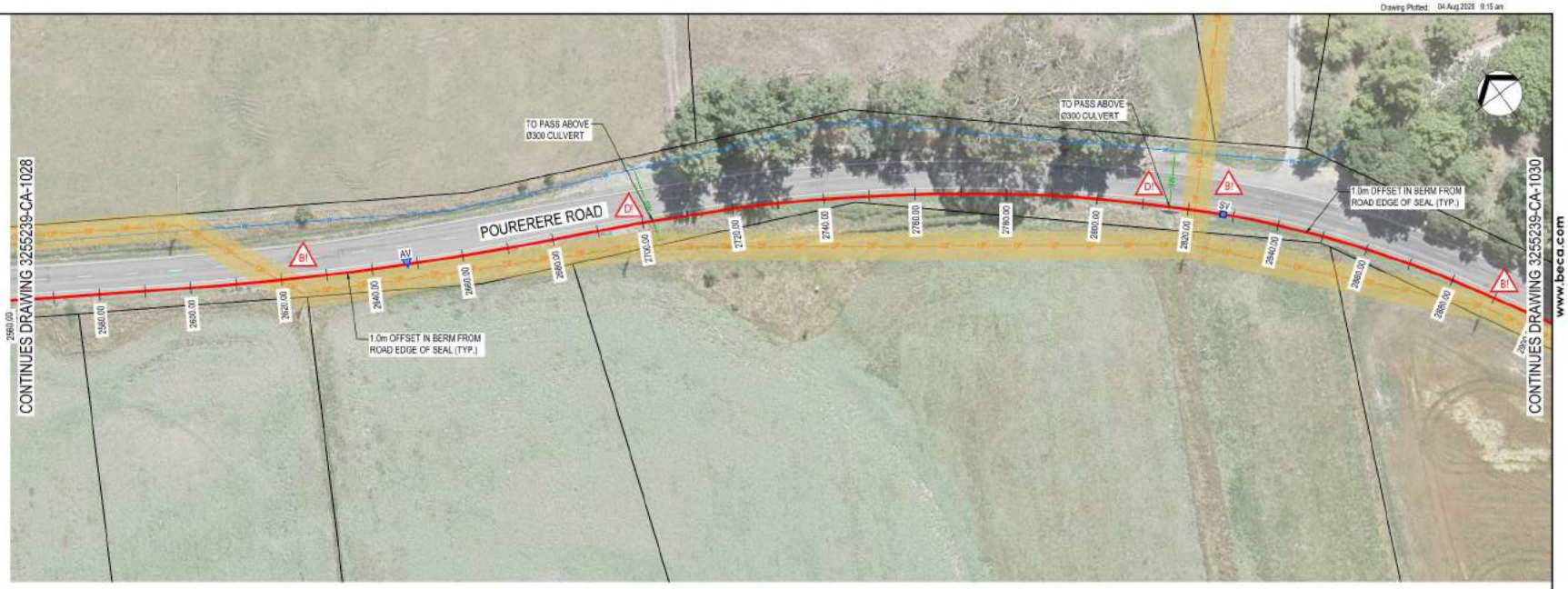

PLAN
SCALE 1:500

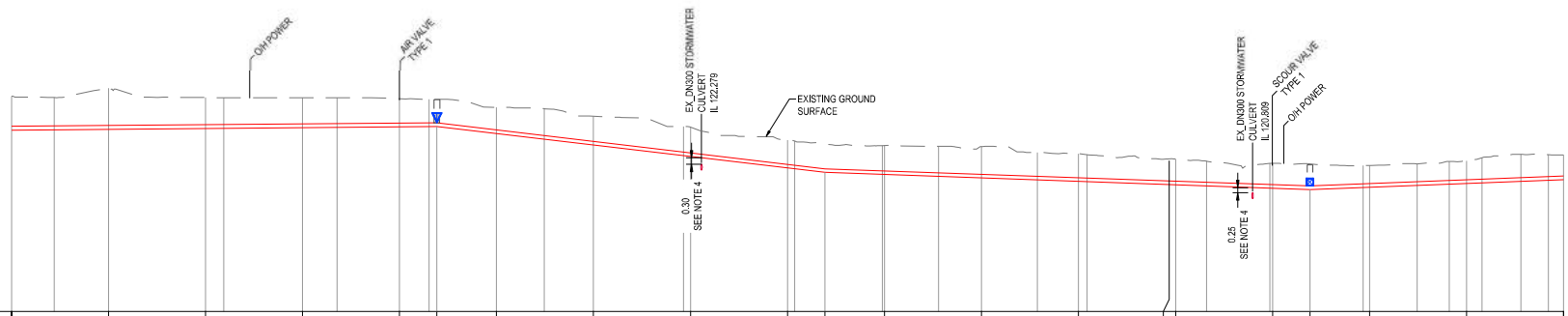

Datum R.L 115.00

EXISTING GROUND LEVEL	126.08	126.48	126.01	126.00	125.95	125.91	125.50	125.05	124.48	123.82	123.64	123.54	123.49	123.12	122.84	122.63	122.60	122.51	122.74	123.04
PIPE INVERT	124.34	124.38	124.42	124.46	124.50	124.51	124.15	123.56	122.97	122.38	122.15	122.05	121.87	121.69	121.52	121.34	121.27	121.39	121.59	121.78
DEPTH TO INVERT	1.74	2.11	1.59	1.54	1.45	1.40	1.35	1.49	1.51	1.44	1.49	1.49	1.62	1.43	1.33	1.29	1.33	1.12	1.16	1.26
COVER DEPTH	1.55	1.92	1.40	1.35	1.26	1.21	1.16	1.30	1.32	1.25	1.30	1.30	1.43	1.24	1.14	1.10	1.14	0.93	0.97	1.07
CHAINAGE	2560.00	2580.00	2600.00	2620.00	2640.00	2647.70	2660.00	2680.00	2700.00	2720.00	2727.70	2740.00	2760.00	2780.00	2800.00	2820.00	2827.70	2840.00	2860.00	2880.00
PIPE SLOPE		0.2%					-2.9%					-0.9%						1.0%		
PIPE MATERIAL	OD200 PE100 PN25																			

LONGITUDINAL SECTION
SCALE HORIZONTAL 1:500
SCALE VERTICAL 1:125

ORIGINAL DRAWING IN COLOUR

DETAILED DESIGN
NOT FOR CONSTRUCTION

No.	Revision	By	Chk	Appd	Date
B	DETAILED DESIGN	RP	PA	RS	03.08.20
A	FOR CLIENT REVIEW	RP	PA	RS	06.07.20

Drawing Originator: Beca

Original Scale (A1) AS SHOWN	Design	A.LEO	03.08.20	Approved For Construction*
	Drawn	R.PRAJAPATI	03.08.20	
Reduced Scale (A3) AS SHOWN	Verifier			
	Dwg Check			Date
	* Refer to Revision 1 for Original Signature			

Client: CENTRAL HAWKE'S BAY DISTRICT COUNCIL

Project: OTANE TO WAIPAWA WASTEWATER RISING MAIN

Title: PLAN AND LONG SECTION SHEET 09 OF 11

Discipline: CIVIL

Drawing No. 3255239-CA-1029 Rev. B

DO NOT SCALE

IF IN DOUBT ASK.

www.beca.com

Document No. 3255239-CA-1029.DWG

NOTES

1. FOR GENERAL NOTES, LEGENDS AND HAZARD WARNINGS REFER TO DRAWING 3255239-CA-0011.
2. FOR AIR VALVE DETAILS, REFER TO 3255239-CA-2011.
3. FOR SCOUR DETAILS, REFER TO 3255239-CA-2012.
4. FOR TRENCH DETAILS, REFER TO 3255239-CA-2013.
5. ALL INVERT LEVELS OF EXISTING UTILITIES ARE ASSUMED AND TO BE CONFIRMED AT SITE.

PLAN
SCALE 1:500

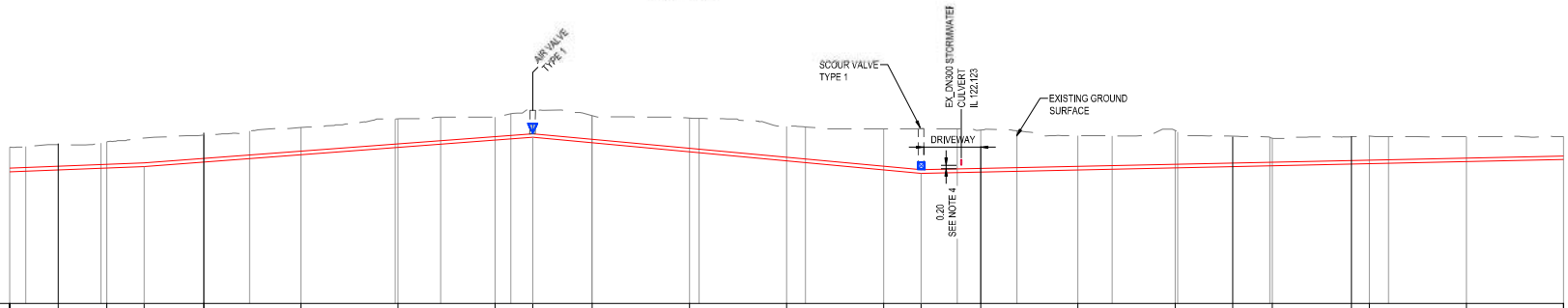

Datum R.L 115.00

EXISTING GROUND LEVEL	123.04		123.33	123.53	123.68		124.07		124.51		124.80	124.94	124.67		124.55		124.13		124.00	124.00	123.93		123.64		123.91		123.51		123.62		123.80		123.80
PIPE INVERT	121.78		121.98	122.05	122.28		122.66		123.03		123.41	123.55	123.27		122.81		122.35		121.88	121.71	121.77		121.88		121.98		122.09		122.20		122.30		122.41
DEPTH TO INVERT	1.26		1.36	1.48	1.39		1.41		1.47		1.19	1.39	1.40		1.74		1.78		2.12	2.29	2.16		1.76		1.92		1.42		1.43		1.30		1.20
COVER DEPTH	1.07		1.17	1.29	1.20		1.22		1.28		1.00	1.20	1.21		1.55		1.59		1.93	2.10	1.97		1.57		1.74		1.24		1.24		1.11		1.01
CHAINAGE	2880.00		2900.00	2907.70	2920.00		2940.00		2960.00		2980.00	2987.70	3000.00		3020.00		3040.00		3060.00	3067.70	3080.00		3100.00		3120.00	3131.79	3140.00		3156.26	3160.00	3180.00		3200.00
PIPE SLOPE		1.0%				1.9%								-2.3%								0.5%												
PIPE MATERIAL	OD200 PE100 PN25																																	

LONGITUDINAL SECTION
SCALE HORIZONTAL 1:500
SCALE VERTICAL 1:125

ORIGINAL DRAWING IN COLOUR

DETAILED DESIGN
NOT FOR CONSTRUCTION

No.	Revision	By	Chk	Appd	Date
B	DETAILED DESIGN	RP	PA	RS	03.08.20
A	FOR CLIENT REVIEW	RP	PA	RS	06.07.20

Drawing Originator: Beca

Original Scale (A1) AS SHOWN	Design	A.LEO	03.08.20	Approved For Construction*
	Drawn	R.PRAJAPATI	03.08.20	
Reduced Scale (A3) AS SHOWN	Verifier			
	Dwg Check			Date

* Refer to Revision 1 for Original Signature

Client: CENTRAL HAWKE'S BAY DISTRICT COUNCIL

Project: OTANE TO WAIPAWA WASTEWATER RISING MAIN

Title: PLAN AND LONG SECTION SHEET 10 OF 11

Discipline: CIVIL

Drawing No. 3255239-CA-1030 Rev. B

DO NOT SCALE

IF IN DOUBT ASK.

Drawing Plotted: 04 Aug 2020 10:09 am

NOTES

1. FOR GENERAL NOTES, LEGENDS AND HAZARD WARNINGS REFER TO DRAWING 3255239-CA-0011.
2. FOR AIR VALVE DETAILS, REFER TO 3255239-CA-2011.
3. FOR SCOUR DETAILS, REFER TO 3255239-CA-2012.
4. FOR TRENCH DETAILS, REFER TO 3255239-CA-2013.
5. ALL INVERT LEVELS OF EXISTING UTILITIES ARE ASSUMED AND TO BE CONFIRMED AT SITE.
6. FOR TEMPORARY TERMINATION DETAIL, REFER TO 3255239-CA-2014 TERMINATION. DISCHARGE DESIGN TO BE PART OF THE FUTURE WWTP DESIGN.

PLAN

SCALE 1:500

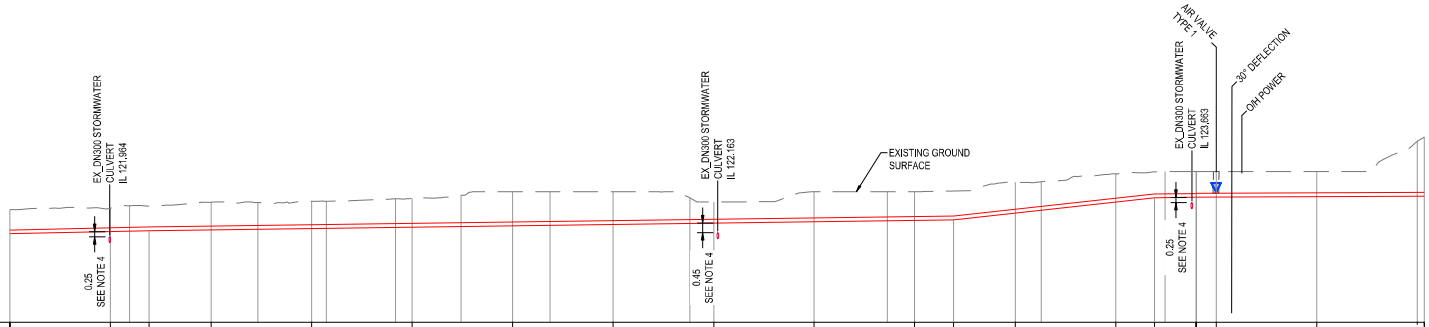

Datum R.L 118.00

EXISTING GROUND LEVEL	123.60	123.67	123.79	123.97	124.02	124.17	124.50	124.50	124.00	124.50	124.50	124.53	124.97	125.39	125.48	125.50	125.50	125.50	127.22
PIPE INVERT	122.41	122.51	122.55	122.60	122.66	122.73	122.80	122.87	122.94	123.00	123.07	123.10	123.43	123.98	124.19	124.22	124.23	124.25	124.32
DEPTH TO INVERT	1.20	1.16	1.23	1.38	1.35	1.44	1.70	1.63	1.06	1.50	1.43	1.43	1.54	1.40	1.29	1.28	1.27	1.25	2.90
COVER DEPTH	1.01	0.97	1.04	1.19	1.16	1.25	1.51	1.44	0.88	1.31	1.24	1.24	1.35	1.21	1.10	1.08	1.07	1.05	2.74
CHAINAGE	3200.00	3220.00	3227.70	3240.00	3260.00	3280.00	3300.00	3320.00	3340.00	3360.00	3380.00	3387.70	3400.00	3420.00	3422.14	3427.70	3436.03	3440.00	3460.00	3481.39
PIPE SLOPE		0.5%		0.3%									2.7%					0.1%	
PIPE MATERIAL		OD200 PE100 PN25																	

LONGITUDINAL SECTION

SCALE HORIZONTAL 1:500
SCALE VERTICAL 1:125

ORIGINAL DRAWING IN COLOUR

DETAILED DESIGN
NOT FOR CONSTRUCTION

No.	Revision	By	Chk	Appd	Date
B	DETAILED DESIGN	RP	PA	RS	03.08.20
A	FOR CLIENT REVIEW	RP	PA	RS	06.07.20

Drawing Originator: Beca

Original Scale (A1) AS SHOWN	Design	A.LEO	03.08.20
	Drawn	R.PRAJAPATI	03.08.20
Reduced Scale (A3) AS SHOWN	Verifier		
	Dwg Check		

Approved for Construction* Date

* Refer to Revision 1 for Original Signature

Client: CENTRAL HAWKE'S BAY DISTRICT COUNCIL

Project: OTANE TO WAIPAWA WASTEWATER RISING MAIN

Title: PLAN AND LONG SECTION SHEET 11 OF 11

Discipline: CIVIL

Drawing No. 3255239-CA-1031 Rev. B

DO NOT SCALE

IF IN DOUBT ASK.

www.beca.com

Document No. 3255239-CA-1031.DWG

AIR VALVE		
ITEM NO.	CHAINAGE	PLAN
1	360	CA-1022
2	420	CA-1022
3	640	CA-1022
4	740	CA-1023
5	1180	CA-1024
6	2180	CA-1027
7	2640	CA-1029
8	2980	CA-1030
9	3440	CA-1031

NOTES

1. FOR GENERAL NOTES REFER TO DRAWING 3255239-CA-0011.
2. DN1050 MAINTENANCE SHAFT (900MM LENGTH) AND CONCRETE PRECAST COVER WITH 915x600 CLASS D LID OR SIMILAR.
3. DN100 UPCV VENT PIPE TO PENETRATE CONCRETE PRECAST COVER WITH MUSHROOM VENT CAP.
4. ALL PIPES AND FITTINGS TO SUIT PN25 RATING.
5. ALL BELOW GROUND FLANGES TO BE PROTECTED BY MASTIC FILLER, PETROLEUM TAPE AND POLYETHYLENE SLEEVE.
6. LOCATIONS OF AIR VALVE INSTALLATIONS IS SHOWN ON PLAN AND LONGITUDINAL SECTION DRAWINGS.
7. SOIL BEARING PRESSURE (SBP) TO BE TESTED IN EACH CHAMBER LOCATION PRIOR TO CONSTRUCTION. IF SBP IS LESS THAN 150 kPa, CONSULT ENGINEER.
8. ALL CHAMBERS TO BE LOCATED OUTSIDE OF THE ROAD CARRIAGEWAY(MINIMUM 1m FROM EDGE OF SEAL).
9. COVER SHOULD LIE AT LEAST 25mm ABOVE SURROUNDING NATURAL SURFACE LEVEL.
10. ALL BOLTS AND NUTS/FASTENERS SHALL BE MADE OF STAINLESS STEEL
11. BLIND FLANGE TO BE REMOVED FOR THE FUTURE CONNECTION OF AIR VALVE. AIR VALVE INSTALLATION IS NOT PART OF THE STAGE 2 WORK. AIR VALVE WILL NEED TO BE INSTALLED BEFORE COMMISSIONING THE RISING MAIN.
12. PRECAST BASES TO BE CONSIDERED AS POSSIBLE OPTION TO BE DISCUSSED WITH COUNCIL ENGINEER.

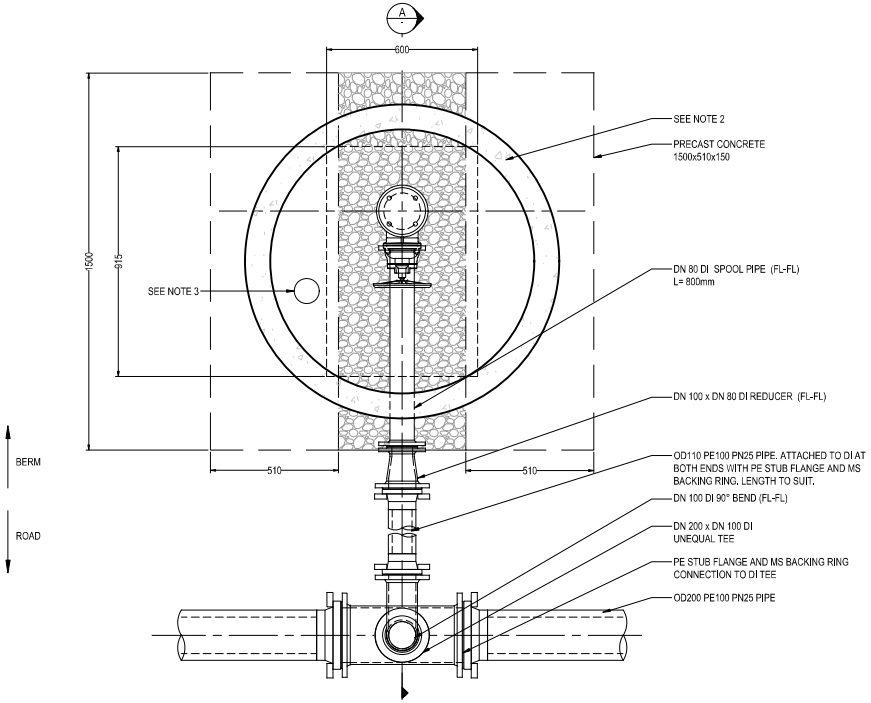

TYPE 1: AIR VALVE BELOW GROUND PIT PLAN
CHAMBER OFFSET FROM THE ROAD
(PIPE IN ROAD)
SCALE 1:10

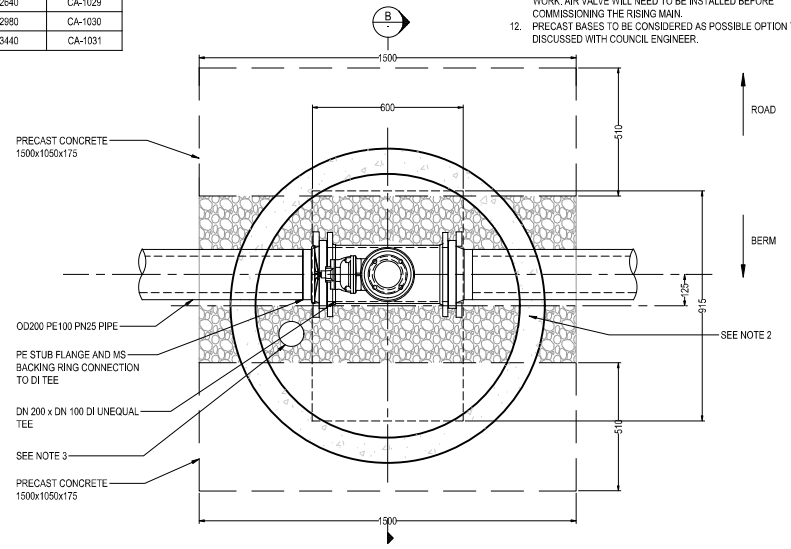

TYPE 2: AIR VALVE BELOW GROUND PIT
PLAN (PIPE IN BERM)
SCALE 1:10

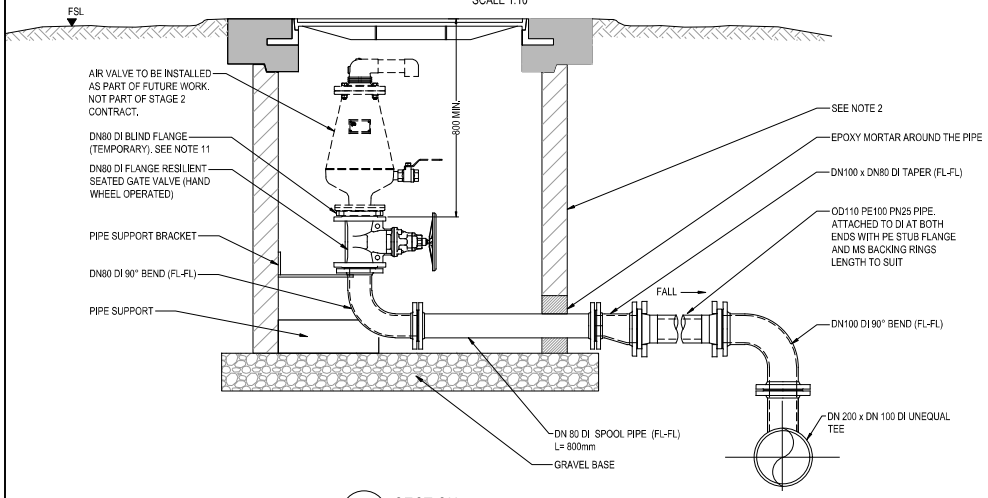

A SECTION
SCALE 1:10

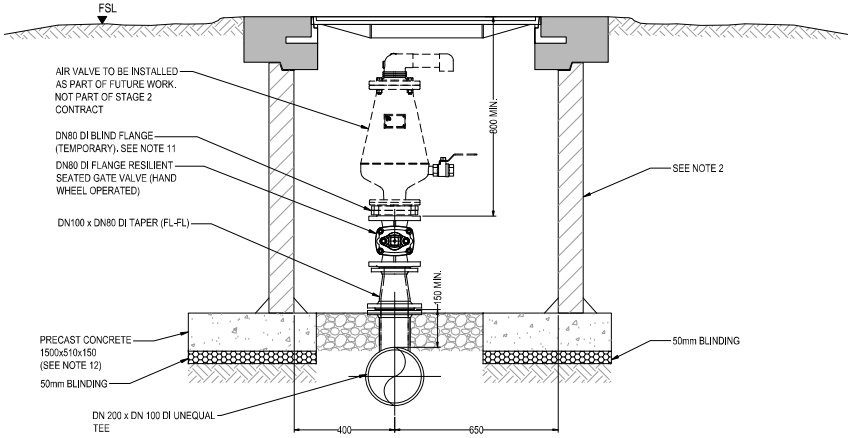

B SECTION
SCALE 1:10

DETAILED DESIGN
NOT FOR CONSTRUCTION

No.	Revision	By	Chk	Appd	Date
B	DETAILED DESIGN	RP	PA	RS	03.08.20
A	FOR CLIENT REVIEW	RP	PA	RS	06.07.20

Drawing Originator: Beca

Original Scale (A1) 1:10	Design	A.LEO	03.08.20
Reduced Scale (A3) 1:20	Drawn	R.PRAJAPATI	03.08.20
	Verifier		
	Dwg Check		

Approved For Construction*
Date
* Refer to Revision 1 for Original Signature

Client: CENTRAL HAWKE'S BAY DISTRICT COUNCIL

Project: OTANE TO WAIPAWA WASTEWATER RISING MAIN

Title: AIR VALVE DETAILS

Discipline: CIVIL

Drawing No. 3255239-CA-2011 Rev. B

DO NOT SCALE

IF IN DOUBT ASK.

www.beca.com

Document No. 3255239-CA-2011.DWG

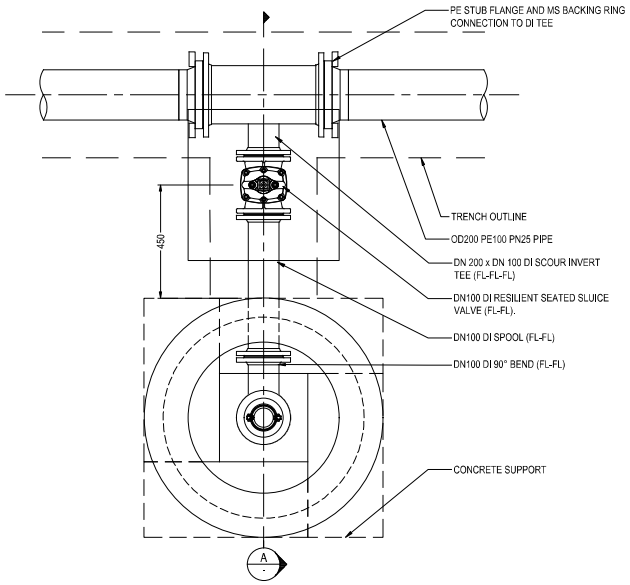

TYPE 1: SCOUR VALVE ASSEMBLY PLAN (PIPE IN BERM)

SCALE 1:10

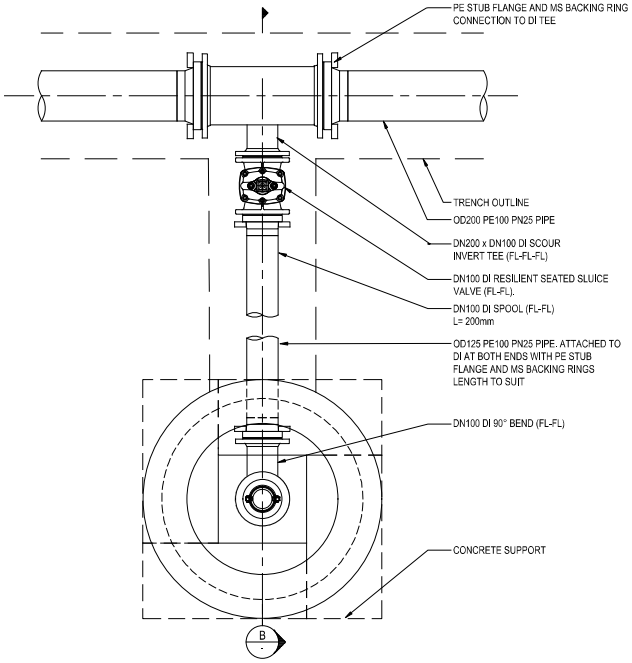

TYPE 2: SCOUR VALVE ASSEMBLY PLAN (PIPE IN ROAD)

SCALE 1:10

NOTES

1. FOR GENERAL NOTES REFER TO DRAWING 3255239-CA-0011.
2. LOCATIONS OF SCOUR INSTALLATION TO BE AS SHOWN ON PLAN AND LONGITUDINAL SECTION DRAWINGS
3. SCOUR VALVE ACCESS COVER TO BE CLASS D IN ACCORDANCE WITH NZS4404 SHEET WW-006
4. TRAFFICABLE DN600 MAINTENANCE SHAFT (300mm LENGTH) AND CONCRETE PRECAST COVER ARRANGEMENT IN ACCORDANCE WITH NZS4404 SHEET WW-005.
5. VALVE COVERS TO BE LOCKABLE.
6. DIRECTION OF VALVE OPENING TO BE IN ACCORDANCE WITH THE SPECIFICATION.
7. TANKER CONNECTION PIT TO BE LOCATED IN THE ROAD BERM NO GREATER THAN 1m FROM EDGE OF SEAL.
8. PRECAST BASES TO BE CONSIDERED AS POSSIBLE OPTIONS. TO BE DISCUSSED WITH COUNCIL ENGINEER.

SCOUR VALVE		
ITEM NO.	CHAINAGE	PLAN
1	60	CA-1021
2	387	CA-1022
3	480	CA-1022
4	690	CA-1023
5	880	CA-1023
6	1720	CA-1026
7	2360	CA-1028
8	2820	CA-1029
9	3060	CA-1030

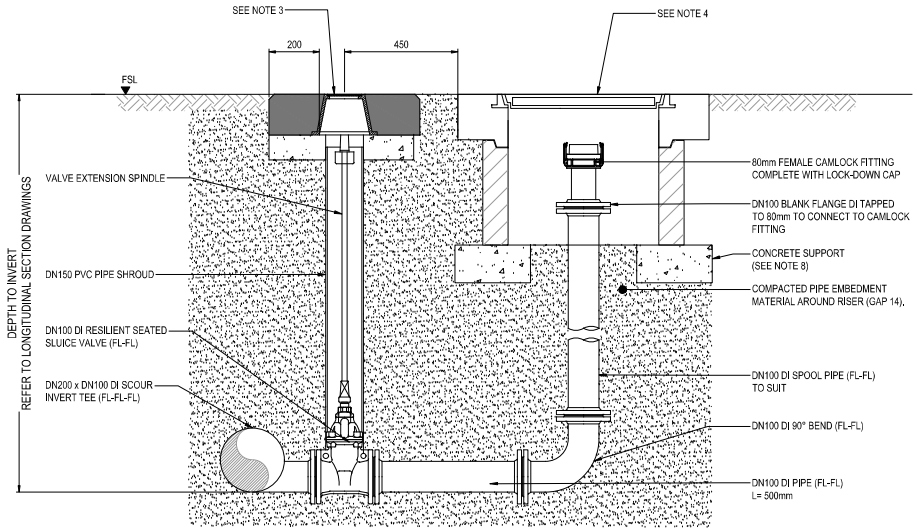

A SECTION

SCALE 1:10

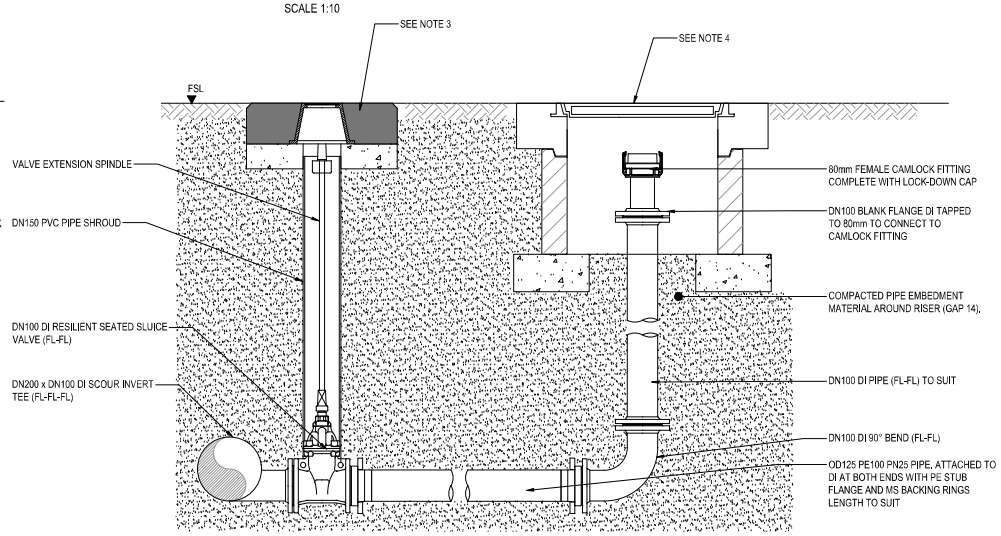

B SECTION

SCALE 1:10

DETAILED DESIGN
NOT FOR CONSTRUCTION

No.	Revision	By	Chk	Appd	Date
B	DETAILED DESIGN	RP	PA	RS	03.08.20
A	FOR CLIENT REVIEW	RP	PA	RS	06.07.20

Drawing Originator: Beca

Original Scale (A1) 1:10 | Reduced Scale (A3) 1:20

Design	A.LEO	03.08.20	Approved For Construction*
Drawn	R.PRAJAPATI	03.08.20	
Verifier			
Dwg Check			Date

* Refer to Revision 1 for Original Signature

Client: CENTRAL HAWKE'S BAY DISTRICT COUNCIL

Project: OTANE TO WAIPAWA WASTEWATER RISING MAIN

Title: SCOUR DETAILS

Discipline: CIVIL

Drawing No. 3255239-CA-2012 | Rev. B

Document No. 3255239-CA-2012.DWG

DO NOT SCALE

IF IN DOUBT ASK.

www.beca.com

NOTES

1. FOR GENERAL NOTES REFER TO DRAWING 3255239-CA-0011.
2. COMPACTED TO 95% MDD IN ACCORDANCE WITH TNZ F/1 SPECIFICATION. COMPACTED IN LAYERS TO ACHIEVE COMPACTION STANDARD.
3. COMPACTED TO 90% MDD IN ACCORDANCE WITH TNZ F/1 SPECIFICATION. COMPACTED IN LAYERS TO ACHIEVE COMPACTION STANDARD.

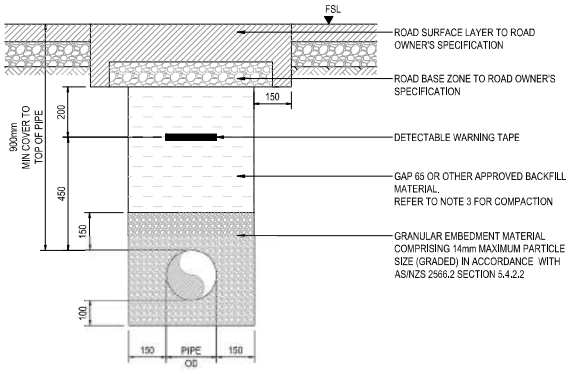

TRENCH DETAIL BY OPEN CUT FOR TRAFFICABLE AREA

SCALE 1:10

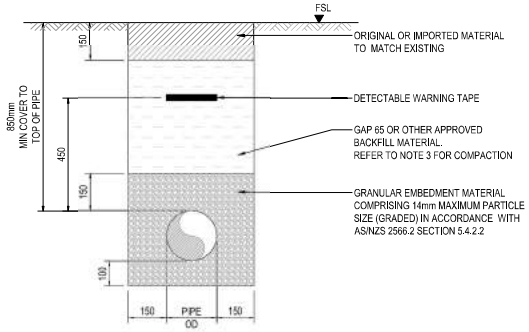

TRENCH DETAIL BY OPEN CUT FOR NON-TRAFFICABLE AREA

SCALE 1:10

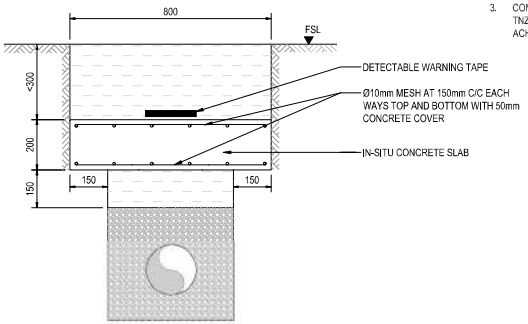

TRENCH DETAIL WITH PROTECTION SLAB

SCALE 1:10

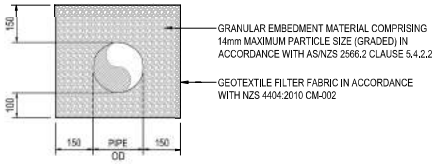

EMBEDMENT DETAIL FOR WATER LOGGED AREA

SCALE 1:10

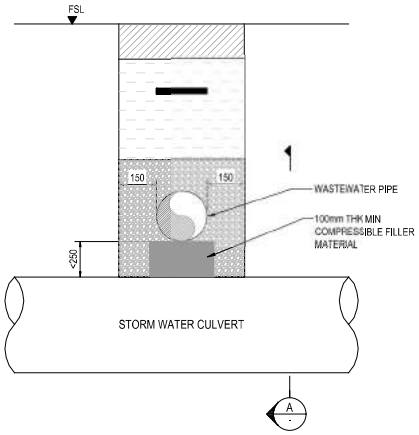

WASTEWATER RISING MAIN CROSSING OVER STORM WATER CULVERT WHERE VERTICAL OFFSET IS LESS THAN 250mm

SCALE 1:10

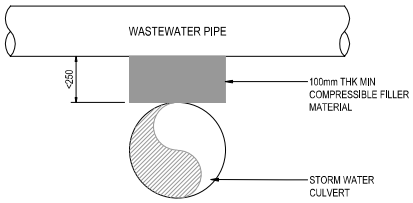

SECTION A

SCALE 1:10

DETAILED DESIGN
NOT FOR CONSTRUCTION

No.	Revision	By	Chk	Appd	Date
B	DETAILED DESIGN	RP	PA	RS	03.08.20
A	FOR CLIENT REVIEW	RP	PA	RS	06.07.20

Drawing Originator: Beca

Original Scale (A1) 1 : 10	Design	A.LEO	03.08.20	Approved For Construction*
	Drawn	R.PRAJAPATI	03.08.20	
Reduced Scale (A3) 1 : 20	Verifier			
	Dwg Check			Date

* Refer to Revision 1 for Original Signature

Client: CENTRAL HAWKE'S BAY DISTRICT COUNCIL

Project: OTANE TO WAIPAWA WASTEWATER RISING MAIN

Title: TRENCH DETAILS CROSS SECTION DETAILS

Discipline: CIVIL

Drawing No. 3255239-CA-2013 Rev. B

DO NOT SCALE

IF IN DOUBT ASK.

www.beca.com

Document No. 3255239-CA-2013.DWG

NOTES

1. FOR GENERAL NOTES REFER TO DRAWING 3255239-CA-0011.

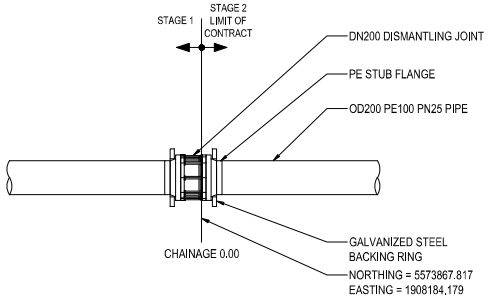

01 - TEMPORARY TERMINATION DETAIL AT F.H. LIMIT OF WORK
SCALE 1:10

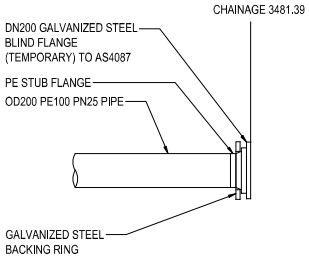

02 - TEMPORARY TERMINATION DETAIL AT STAGE 2 LIMIT OF WORK
SCALE 1:10

DETAILED DESIGN
NOT FOR CONSTRUCTION

No.	Revision	By	Chk	Appd	Date
B	DETAILED DESIGN	RP	PA	RS	03.08.20
A	FOR CLIENT REVIEW	RP	PA	RS	06.07.20

Drawing Originator: Beca

Original Scale (A1) AS SHOWN	Design	A.LEO	03.08.20	Approved For Construction*
	Drawn	R.PRAJAPATI	03.08.20	
Reduced Scale (A3) AS SHOWN	Verifier			
	Dwg Check			Date

* Refer to Revision 1 for Original Signature

Client: CENTRAL HAWKE'S BAY DISTRICT COUNCIL

Project: OTANE TO WAIPAWA WASTEWATER RISING MAIN

Title: TEMPORARY TERMINATION DETAILS

Discipline: CIVIL

Drawing No. 3255239-CA-2014 Rev. B

DO NOT SCALE

IF IN DOUBT ASK.

www.beca.com

Document No. 3255239-CA-2014.DWG

E

Appendix E – Preferred Option Cost Estimate

Cost Estimate

Project: 325 - AUCKLAND WATER **Details:** Stage 1 Tender Design Estimate
Building: Otane Waste Water Rising Main

Code	Description	Quantity	Unit	Rate	Subtotal	Total
	SCHEDULE OF PRICES					
	Central Hawkes Bay District Council					
	OTANE TO WAIPAWA WASTEWATER RISING MAIN (STAGE 1)					
100	**PRELIMINARY & GENERAL**					
	The Contractor is to allow for all Preliminary and General costs required to construct the Otane to Waipawa Wastewater Rising Main (Stage 1) pipeline as described in the Drawings and Specifications.	1	LS	150,000.00	150,000	150,000
	The Preliminary and General costs are expected to include for, but are not limited to:		Note			
101	Insurances	1	LS			
102	General & Construction Management	1	LS			
103	Traffic Management & Site Security	1	LS			
104	Establishment / Disestablishment	1	LS			
105	Locate and Avoid Existing Services	1	LS			
106	Public and Land Owner liaison	1	LS			
107	Consultation and liaison with effected parties	1	LS			
108	As built records	1	LS			
502	**WASTEWATER RISING MAIN (Stage 1)**					
502.1	Supply and install OD200 PE100 PN25 rising main generally trenched 0-2.0m deep; including, but not limited to: welding, excavation, bedding, backfilling, and reinstating existing surface.	4,361	m	294.00	1,282,134	1,282,134
502.1.1	Extra over for additional deeper trenching 2-3m deep.	120	m	80.00	9,600	9,600
502.2	Extra over item to reinstate private driveway. Additional to reinstatement for water pipe.	117	m	44.00	5,148	5,148

Cost Estimate

Project: 325 - AUCKLAND WATER **Details:** Stage 1 Tender Design Estimate
Building: Otane Waste Water Rising Main

Code	Description	Quantity	Unit	Rate	Subtotal	Total
502.3	Extra over item to reinstate public road. Additional to reinstatement for wastewater pipe.	522	m	44.00	22,968	22,968
502.4	Allowance for supply and installation of wastewater air valves complete with valve chambers and all associated civil works and pipeworks:		Note			
502.4.1	Air Valve Type 1.	5	each	13,000.00	65,000	65,000
502.4.2	Air Valve Type 2.	3	each	10,000.00	30,000	30,000
502.5	Allowance for supply and installation of scour valves, complete with valve chambers and all associated civil works and pipework:		Note			
502.5.1	Scour Valve Type 1.	5	each	10,500.00	52,500	52,500
502.5.2	Scour Valve Type 2.	2	each	10,000.00	20,000	20,000
502.6	Additional allowance for drain or stream crossing of not more than 3m water surface width.	2	each	3,500.00	7,000	7,000
502.7	Extra over for temporary termination detail at F.H. limit of work Refer to CA-1017 detail 01.	2	each	937.00	1,874	1,874
502.8	Hydrostatic testing of wastewater pipeline.	1	each	26,000.00	26,000	26,000
	TENDER DESIGN ESTIMATE					**1,672,224**
	CONTINGENCY	10	%	1,672,224	170,000	170,000
	Rounding	1	LS	-2,224	-2,224	-2,224
	TOTAL CONSTRUCTION BUDGET					**1,840,000**
	ESTIMATE CLARIFICATIONS					
0.01	The estimate is based on Beca tender design information received 14/10/2019.					
0.02	All quantities and measures are approximate and taken from the drawings.					
0.03	The estimate assumes continuity of work and unobstructed access to site.					

Project: 325 - AUCKLAND WATER **Details:** Stage 1 Tender Design Estimate
Building: Otane Waste Water Rising Main

Code	Description	Quantity	Unit	Rate	Subtotal	Total
0.04	The estimate assumes that the project will be procured as a competitive Lump Sum tender with at least 3 suitable tenderers.					
0.05	Pipe trench alignment is assumed to be located in the road shoulder and the estimated pipelaying rates include for chipseal surface restoration.					
0.06	PE pipe supply pricing is based on Hynds budget supply pricing received 8/07/2019.					
0.07	Estimates assume all pipelaying excavation spoil is disposed off-site and all bedding and backfilling materials are imported materials.					
0.08	Allowances for air valve and scour arrangements are based on cost information from previous projects.					
0.09	Supply of the air valves themselves is excluded. The estimate includes allowances for the air valve chambers and pipework connections.					
	Project Specific Exclusions					
0.10	Incurred costs to date.					
0.11	Treating & handling hazardous materials including asbestos.					
0.12	Soft spots and ground improvements - no allowance for undercutting and soft raft foundations.					
0.13	Services relocations.					
0.14	Underground obstructions.					
0.15	Supply of DN80 air valves.					
0.16	Land purchase and arranging access to private property e.g. forming new easements.					
0.17	Professional Fees.					
0.18	Client-owned direct project costs.					
0.19	Resource consenting.					
	General Estimate Exclusions					
0.20	Goods and Services Tax (GST).					
0.21	Construction cost escalation beyond date of the report.					

Project: 325 - AUCKLAND WATER **Details:** Stage 1 Tender Design Estimate
Building: Otane Waste Water Rising Main

Code	Description	Quantity	Unit	Rate	Subtotal	Total
0.22	Foreign exchange cost fluctuations.					
0.23	Staged or phased handover or commissioning.					
0.24	Fast track / accelerated programme.					
	Risks					
0.25	Cost escalation and foreign exchange rates.					
0.26	Working around existing services.					
	General Considerations and Limitations.					
0.27	This estimate is solely for our Client's use for the purpose for which it is intended in accordance with the agreed scope of work. It may not be disclosed to any person other than the Client and any use or reliance by any person contrary to the above, to which Beca has not given its prior written consent, is at that person's own risk.					
0.28	This tender design stage cost estimate has been developed to assist the Client with budget setting and evaluating the tender price submission for the Stage 1 work.					
0.29	The probable accuracy range of estimate is -10% to +15%.					

Cost Estimate

Project: 325 – AUCKLAND WATER **Details:** Stage 2 Detailed Design Estimate

Building: Otane Wastewater Rising Main

Code	Description	Quantity	Unit	Rate	Subtotal	Total
	SCHEDULE OF PRICES					
	Central Hawkes Bay District Council					
	OTANE TO WAIPAWA WASTEWATER RISING MAIN (STAGE 2)					
100	**PRELIMINARY & GENERAL**					
	The Contractor is to allow for all Preliminary and General costs required to construct the Otane to Waipawa Wastewater Rising Main (Stage 2) pipeline as described in the Drawings and Specifications.	1	LS	200000.00	200000.00	200000.00
	The additional Preliminary and General costs are expected to include for, but are not limited to:		Note			
101	Insurances	1	LS			
102	General & Construction Management	1	LS			
103	Traffic Management & Site Security	1	LS			
104	Establishment / Disestablishment	1	LS			
105	Locate and Avoid Existing Services	1	LS			
106	Public and Land Owner liaison	1	LS			
107	Consultation and liaison with effected parties	1	LS			
108	As built records	1	LS			
	Subtotal - Preliminary and General				200000.00	200000.00

Cost Estimate

Project: 325 – AUCKLAND WATER **Details:** Stage 2 Detailed Design Estimate

Building: Otane Wastewater Rising Main

Code	Description	Quantity	Unit	Rate	Subtotal	Total
502	**WASTEWATER RISING MAIN (Stage 2)**					
502.1	Supply and install OD200 PE100 PN25 rising main generally trenched 0-2.0m deep; including, but not limited to: welding, excavation, bedding, backfilling, and reinstating existing surface.	3482	m	250.00	870500.00	870500.00
502.2	Extra over for additional deeper trenching 2-3m deep.	600	m	80.00	48000.00	48000.00
502.3	Extra over for bulkheads and trench stops.	1	LS	17800.00	17800.00	17800.00
502.4	Extra over item to reinstate private driveway.	60	m	44.00	2640.00	2640.00
502.5	Extra over item to reinstate public road. Additional to reinstatement for wastewater pipe.	100	m	44.00	4400.00	4400.00
502.6	Allowance for supply and installation of wastewater air valves complete with valve chambers and all associated civil works and pipeworks:		Note			
502.6.1	Air Valve Type 1.	5	each	16000.00	80000.00	80000.00
502.6.2	Air Valve Type 2.	4	each	14000.00	56000.00	56000.00
502.7	Allowance for supply and installation of scour valves, complete with valve chambers and all associated civil works and pipework:		Note			
502.7.1	Scour Valve Type 1.	8	each	16200.00	129600.00	129600.00
502.7.2	Scour Valve Type 2.	1	each	16000.00	16000.00	16000.00
502.8	Extra over for temporary termination detail at connection to Stage 1 limit of work at chainage 0. Refer to CA-2014 detail 01.	1	each	950.00	950.00	950.00

Cost Estimate

Project: 325 – AUCKLAND WATER **Details:** Stage 2 Detailed Design Estimate

Building: Otane Wastewater Rising Main

Code	Description	Quantity	Unit	Rate	Subtotal	Total
502.9	Extra over for temporary termination detail at Stage 2 limit of work at chainage 3440. Refer to CA-2014 detail 02.	1	each	950.00	950.00	950.00
502.10	Hydrostatic testing of wastewater pipeline.	1	each	26000.00	26000.00	26000.00
	Subtotal - Wastewater Rising Main (Stage 2)					1252840.00
	TENDER DESIGN ESTIMATE					1452840.00
	CONTINGENCY	10%	%	1452840.00	145284.00	145284.00
	Rounding	1	LS	-3124.00	-3124.00	-3124.00
	TOTAL CONSTRUCTION BUDGET					1595000.00
	ESTIMATE CLARIFICATIONS					
0.01	This tender design stage cost estimate has been developed to assist the Client with budget setting and evaluating the tender price submission for the Stage 2 work.					
0.02	The estimate is based on Beca detailed design information including the following drawings plotted on 26/06/2020: 3255239-CA-0010 Rev A 3255239-CA-0011 Rev A 3255239-CA-1021 Rev A 3255239-CA-1022 Rev A 3255239-CA-1023 Rev A 3255239-CA-1024 Rev A 3255239-CA-1025 Rev A 3255239-CA-1026 Rev A 3255239-CA-1029 Rev T0 3255239-CA-1030 Rev A 3255239-CA-1031 Rev T0 3255239-CA-2011 Rev A 3255239-CA-2012 Rev A 3255239-CA-2013 Rev A 3255239-CA-2014 Rev A					

Cost Estimate

Project:	325 – AUCKLAND WATER	**Details:**	Stage 2 Detailed Design Estimate
Building:	Otane Wastewater Rising Main		

Code	Description	Quantity	Unit	Rate	Subtotal	Total
0.03	All quantities and measures are approximate and taken from the drawings.					
0.04	The estimate assumes continuity of work and unobstructed access to site.					
0.05	The estimate assumes that the project will be procured as a competitive Lump Sum tender with at least 3 suitable tenderers.					
0.06	Pipe trench alignment is assumed to be located in the road shoulder and the estimated pipelaying rates include for surface restoration.					
0.07	PE pipe supply pricing is based on Hynds budget supply pricing received 18/07/2019 and 17/06/2020.					
0.08	Estimates assume all pipelaying bedding and backfilling materials are as per the trench details provided.					
0.09	Supply of the air valves themselves is excluded. The estimate includes allowances for the air valve chambers and pipework connections.					
0.10	The cost estimate has been benchmarked against the Stage 1 tender prices.					
	Project Specific Exclusions					
0.11	Treating & handling hazardous materials including asbestos.					
0.12	Soft spots and ground improvements - no allowance for undercutting and soft raft foundations.					
0.13	Services relocations.					
0.14	Underground obstructions.					
0.15	Supply of air valves.					
0.16	Work outside normal working hours.					
0.17	Foreign exchange cost fluctuations.					
0.18	Professional Fees.					
0.19	Resource consenting.					
0.20	Client-owned direct project costs.					

Cost Estimate

Project: 325 – AUCKLAND WATER **Details:** Stage 2 Detailed Design Estimate

Building: Otane Wastewater Rising Main

Code	Description	Quantity	Unit	Rate	Subtotal	Total
0.21	Construction cost escalation beyond date of the report.					
0.22	Land purchase and arranging access to private property e.g. forming new easements.					
0.23	Costs of impacts associated with extraordinary global events (such as the current COVID-19 outbreak).					
	General Estimate Exclusions					
0.24	Goods and Services Tax (GST).					
0.25	Incurred costs to date.					
0.26	Fast track / accelerated programme.					
0.27	Staged or phased handover or commissioning.					
	Expected Estimate Range:					
0.28	Estimate range is an indication of the degree to which the final cost outcome for a given project will vary from the estimated cost – it is not an additional Contingency. Range is expressed as a +/- percentage range around the point of estimate after the application of contingency, with a stated level of confidence that the actual cost outcome would fall within this range. As the level of project definition increases and the tender date draws nearer, the expected range of the estimate tends to improve, as indicated by a tighter +/- range.					
0.29	The estimates are based on detailed design information. The pipeline estimate is deemed to be a Class 2 estimate in terms of the AACE Cost Estimate Classification System guidelines. The probable accuracy range of the estimate is likely to be no better than -10% to +15%.					

Cost Estimate

Project:	325 – AUCKLAND WATER	**Details:**	Stage 2 Detailed Design Estimate
Building:	Otane Wastewater Rising Main		

Code	Description	Quantity	Unit	Rate	Subtotal	Total
	Risks					
0.30	Cost escalation and foreign exchange rates.					
0.31	Ground conditions.					
0.32	Working around existing services.					
0.33	Costs of impacts associated with extraordinary global events (such as the current COVID-19 outbreak).					
	General Considerations and Limitations.					
0.34	This estimate is solely for our Client's use for the purpose for which it is intended in accordance with the agreed scope of work. It may not be disclosed to any person other than the Client and any use or reliance by any person contrary to the above, to which Beca has not given its prior written consent, is at that person's own risk.					

F

Appendix F – Safety in Design Risk Register

3255239 - Otane to Waipawa Wastewater Ring Main - Safety in Design Risk Assessment Register

Attendees at review meeting:

Beca: Alex Leo, Joel Ascan, Sophie Hunter

Scribe: **SH**
Approved By: **AL**
Stage of Project: **Stage 1 - Detailed Design**

Project No: **3255239**
Date: **27 October 2019**
Revision: **Rev A**

RISKS ASSOCIATED WITH DESIGN ELEMENTS					Risk Matrix			PROPOSED & APPROVED MITIGATION MEASURES	Mitigated Risk & Resolution							RESIDUAL RISK	
Ref	Hazard (Guideword)	Cause / Risk / Hazard	Consequence	Existing controls, if any	L	C	LR	Proposed Control (1 Eliminate, 2 Substitute, 3 Reduce, 4 Control)	L	C	LR	Risk Owner	Client Approved	Design Status	Date	Risk Owner	Action Required
1	**Construction Phase**																
1.01	*Movement Direction*	Machine working and moving constantly	Causing injury and/or death to personnel. Damage to existing surfaces.		3	4	H	Maintain a safe working area around moving plant All warning alarms and flags on vehicles/plant to be in working order and inspected daily before work starts. Workers to wear PPE. All visitors to report to the site office and get a safety induction before going onto site. Protect the surfaces from plant movement.	2	2	L	Client/Constructor		Closed		Contractor	Further mitigations to be detailed in the Contractors SSHSP and methodology.
1.02	*Position / Location*	Pipes may move/roll during delivery and unloading of pipes	Causing injury to personnel.		1	3	M	Select location to minimize potential for movement. Minimize height of the stockpile. Provide secure stockpile area for pipes and fittings. Follow manufacturers instructions.	2	2	L	Client/Constructor		Closed		Contractor	Further mitigations to be detailed in the Contractors SSHSP and methodology.
1.03	*Egress / Access*	Trench or pit collapse.	Labourers or machines trapped under soil causing injury and/or death to personnel.	Design pipes to have shallow grade to reduce trench depths.	2	4	H	Ground investigation data and information from previous watermain construction shall be provided. Use of shoring/shield/sheet piles. No load to be placed or moved near the edge of trench. Excavation to be inspected daily by competent person.	2	2	L	Detailed Designer/Client/Constructor		Closed		Contractor	Further mitigations to be detailed in the Contractors SSHSP and methodology.
1.04	*Egress / Access*	Confined spaces	Causing injury and/or death to personnel.		1	4	M	Undertake risk assessment and follow confined space entry procedures. Use accredited trained personnel. No smoking/mobile phone use, avoid sparking. Obtain excavation permit and follow trenching procedures. Address in JSA.	1	2	L	Client/Constructor		Closed		Contractor	Further mitigations to be detailed in the Contractors SSHSP and methodology.
1.05	*Heights / Depths*	People or animal falling into trench	Causing injury and/or death to personnel.	Design pipes to have shallow grade to reduce trench depths.	2	3	M	Erect security fence if open excavation to be left unattended or cover the excavation with suitable material i.e. steel plate if left unattended. No personnel movement across the trench. Where possible backfill trenches. Maintain communication with local residents, request notification on any planned stock movements.	2	2	L	Client/Constructor		Closed		Contractor	Further mitigations to be detailed in the Contractors SSHSP and methodology.
1.06	*Heights / Depths*	Falling people or objects into trenches	Causing injury and/or death to personnel.	Design pipes to have shallow grade to reduce trench depths.	2	4	H	Materials not to be placed or staked near the edge of trench. Keep safe distance from edge of trench. Workers to wear PPE. No rollable objects stored uphill from excavation. Max excavation of 2.5m	1	2	L	Client/Constructor		Closed		Contractor	Further mitigations to be detailed in the Contractors SSHSP and methodology.
1.07	*External safety interfaces*	Construction activity resulting in striking of existing buried services and thrust blocks.	Causing injury and/or death to personnel. Damage to existing services/ stakeholder assets resulting in increased time and cost.	DBYD and existing services desktop investigation undertaken	2	4	H	Review services relocation design/as-built prior to construction, including existing thrust blocks. Learnings from he watermain construction have been passed on to from CHBDC to designers. Use of experienced staff in construction teams. Use of excavation permit system. DBYD and service proving (non-destructive digging) prior to construction.	1	4	M	Detailed Designer/Client/Constructor		Closed		Contractor	Further mitigations to be detailed in the Contractors SSHSP and methodology.
1.08	*External safety interfaces*	Working in proximity to overhead and underground power cables.	Risk of electrocution causing injury and/or death to personnel.	Design pipes alignment to keep safe distance from power cables.	2	4	H	Appropriate planning and risk assessment to be completed. Determine the location of underground services. If underground power cables are located in the vicinity, exercise extreme care while excavating. Consult power distributor and comply with requirements. Consider height limiting devices and correctly sized machinery.	1	4	M	Detailed Designer/Client/Constructor		Closed		Contractor	Further mitigations to be detailed in the Contractors SSHSP and methodology.
1.09	*Load / Force / Energy*	Lifting of pipework and equipment.	Causing injury to personnel.		3	3	H	Lifting equipment must be inspected and tagged/color-coded by a competent person. Exclusion zones must be set up prior to and during dismantling operations. Barricade the area where lifting operation is on going. Use of manageable pipe lengths for manual tasks.	1	3	M	Client/Constructor		Closed		Contractor	Further mitigations to be detailed in the Contractors SSHSP and methodology.
1.10	*Load / Force / Energy*	Defective material/inferior class of pipe causing pipe failure /collapse	Causing injury to personnel.		1	3	M	Visual inspection of material. Follow inspection and test plan. Structural calculation for buried pipes undertaken. Designer has specified heavy duty class pipes suitable for the given external loading and test pressure.	1	2	L	Detailed Designer/Constructor		Closed		Contractor	Further mitigations to be detailed in the Contractors SSHSP and methodology.
1.11	*Load / Force / Energy*	Pressure testing of pipework	Pipe/joint failure may cause body injuries	Use of welded and flanged joints to avoid out of balance thrusts and the need for thrust blocks	3	4	H	Appropriate submission and review of work method statements. Only competent person to perform the task adequately secure connecting pipes Not to exceed pipe operating pressure. Adequate support where a change in direction or reducer occurs.	2	3	M	Client/Constructor		Closed		Contractor	Further mitigations to be detailed in the Contractors SSHSP and methodology.
1.12	*External safety interfaces*	Public access to construction sites.	Causing injury and/or death to public.		2	4	H	Provide appropriate fencing or barricade as per site risk assessment. Apply appropriate signage and pedestrian control. Devise and implement system for site inspection and security.	1	3	M	Client/Constructor		Closed		Contractor	Further mitigations to be detailed in the Contractors SSHSP and methodology.
1.13	*External safety interfaces*	Construction access off public roads leads to traffic accidents	Traffic accident causing injury and/or death to public and/or personnel. Risk of overnight collision with plant on side of road.		1	5	H	Address as part of Construction Management Plan - Risk assessment and appropriate traffic management plan implemented by proven traffic management subcontractor, who is active in the local area. Keep area clean and clear of obstacles. No plant to be left in road berm overnight.	1	2	L	Client/Constructor		Closed		Contractor	Further mitigations to be detailed in the Contractors SSHSP and methodology.
1.14	*External safety interfaces*	Proximately to rail causes collision with rail movement and plant or staff.	Plant and people collision with train		3	5	E	Alignment is kept as far from tracks as possible and is compliant with KiwiRail requirements. No work within the railway track is required. Contractor to be aware of the close proximity to the rail and ensure controls are in place to stop plant and staff straying in to the rail corridor.	1	5	H	Client/Constructor		Closed		Contractor	Further mitigations to be detailed in the Contractors SSHSP and methodology.

3255239 - Otane to Waipawa Wastewater Ring Main - Safety in Design Risk Assessment Register

Attendees at review meeting:

Beca: Alex Leo, Joel Ascan, Sophie Hunter

Scribe: **SH**
Approved By: **AL**
Stage of Project: **Stage 1 - Detailed Design**

Project No: **3255239**
Date: **27 October 2019**
Revision: **Rev A**

RISKS ASSOCIATED WITH DESIGN ELEMENTS					Risk Matrix			PROPOSED & APPROVED MITIGATION MEASURES	Mitigated Risk & Resolution							RESIDUAL RISK	
Ref	Hazard (Guideword)	Cause / Risk / Hazard	Consequence	Existing controls, if any	L	C	LR	Proposed Control (1 Eliminate, 2 Substitute, 3 Reduce, 4 Control)	L	C	LR	Risk Owner	Client Approved	Design Status	Date	Risk Owner	Action Required
1.15	*External safety interfaces*	Work may require the construction of a railway crossing. Work around rail causes collision with rail movement and plant or staff.	Plant and people collision with train		4	5	E	Alignment now avoids crossing the railway removing the need for work in the rail corridor.	0	5		N/A		Closed		N/A	
1.15	*Timing*	High water level floods the trenches and/or excavations which impedes accessibility.	Requires dewatering and delays program.		3	1	L	Install appropriate environmental controls. Sequence construction works to avoid having open excavations during inclement weather.	2	1	L	Client/Constructor		Closed		Contractor	Further mitigations to be detailed in the Contractors SSHSP and methodology.
1.16	*Environmental conditions*	Encountering buried contaminants. Notably asbestos pipework present on Racecourse Road.	Personnel exposed to contaminants causing illness.		3	4	H	AC Pipe from the Council GIS has been marked on the drawings and flagged as a hazard. Contractor will be required to address mitigations for working in proximity to the pipe. It is recommended that the asbestos risk is discussed in the daily toolbox talks.	1	2	L	Client/Constructor		Closed		Contractor	Further mitigations to be detailed in the Contractors SSHSP and methodology.
1.17	*Poor Ergonomics*	Manual handling and hand digging required	Injury to personnel.		3	2	M	Use personnel appropriately trained for tasks. To be mitigated by Contractor methodology.	2	2	L	Client/Constructor		Closed		Contractor	Further mitigations to be detailed in the Contractors SSHSP and methodology.
1.18	*Environmental conditions*	Construction noise	Nuisance to public.		4	1	M	Comply with EPA guidelines and council approvals. Contractor to mitigate in methodology.	4	1	M	Client/Constructor		Closed		Contractor	Further mitigations to be detailed in the Contractors SSHSP and methodology.
1.19	*Environmental conditions*	Stock movements	Collision, escape, stock falling into excavations		2	4	H	Early engagement with farmers. Strong communication from Contractor during construction. Utilise CHBDC's relationship with local residents to understand their requirements during construction.	1	4	M	Client/Constructor		Closed		Contractor	Communications plan to be developed between Client and Contractors. Plan will detail expected resident communication requirements.
1.20	*Load / Force / Energy*	Injury associated with use of high risk equipment (e.g. quick-cut saws, angle grinders etc)	Causing significant injury		3	3	H	Utilise personnel trained in safe use of equipment.	2	3	M	Client/Constructor		Closed		Contractor	Further mitigations to be detailed in the Contractors SSHSP and methodology.
1.21	*Timing*	Site left established over Christmas holiday leads to increased risks of traffic and pedestrian collision, theft and damage.	Risk to public, falling into open excavations, vandalism, injury.		2	4	H	Contractor will close all excavations and move plant and materials to a secure location.	1	2	L	Client/Constructor		Closed		Contractor	Further mitigations to be detailed in the Contractors SSHSP and methodology.
2	**Operation & Maintenance Phase**																
2.01	*External safety interfaces*	Public access to air valve and scour shaft.	Injury to public during discharge through exposure to high/fast flows	Use of Client's standard arrangement for lockable shaft cover to prevent access into the pipe	2	2	L	Consider additional fencing, grating, and signage to further limit access if vandalism/entry is an issue.	2	2	L	Client/Detailed Designer		Closed		Client	No further action at this stage. CHBDC may wish to consider further access controls if access issues arise.
2.02	*Environmental conditions*	Pipe breaking and contaminating water or stormwater assets.	Wastewater leakage into waterways and drains. Contaminating nearby watermain.		2	3	M	Minimum separation from watermain features has been followed where feasible. Crossing over the larger culverts is unavoidable, however these crossings have been design to avoid long length of parallel runs with stormwater pipes.	1	3	M	Client/Detailed Designer		Closed		Client	Contamination of SW assets remains a risk. Early identification and regular maintenance and inspection of the rising main will help mitigate this remaining risk.
2.03	*Environmental conditions*	Isolation valves failing to operate.	Poor isolation of flow in the existing conduit/aqueduct and scour offtakes during shutdown, leading to expose to water under pressure, and discharge of raw water to the environment		3	2	M	Client Ops to regularly exercise and maintain valves.	1	2	L	Client		Closed		Client	To be included as part of the brief to operations team.
2.04	*Position / Location*	Access to valves for maintenance	Damage to valve during maintenance. Risk of cars on road when accessing valves for maintenance causing serious harm or death	Air valves located in chambers.	2	5	H	Air and Scour valves have been positioned outside of road corridor in berm	1	5	H	Client/Detailed Designer		Closed		Client	The operations team will still be exposed to a residual traffic collision risk even when working in the berm. It is recommended that suitable traffic warnings and controls be included as
2,05	*Energy*	Maintenance of air valve	Risk of injury due to exposure of discharges from air valve	Isolation valve is provided to isolate the air valve	2	2	L	Make operations team aware of the requirement to isolate the air valve before conducting any maintenance.	2	1	L	Client		Closed		Client	To be included as part of the brief to operations team.

Key;

C=	Consequence	1) Low 2) Moderate 3) Significant 4) Major 5) Critical
L=	Likelihood	1) Rare 2) Unlikely 3) Possible 4) Likely 5) Almost Certain
LR =	Level of Risk	L) Low M) Moderate H) High E) Extreme

3255239 - Otane to Waipawa Wastewater Ring Main - Safety in Design Risk Assessment Register

Attendees at review meeting:

Beca: Alex Leo, Joel Ascan, Sophie Hunter

Scribe: **SH**
Approved By: **AL**
Stage of Project: **Stage 2 Detailed Design**

Project No: **3255239**
Date: **3 August 2020**
Revision: **Rev A**

RISKS ASSOCIATED WITH DESIGN ELEMENTS					Risk Matrix			PROPOSED & APPROVED MITIGATION MEASURES	Mitigated Risk & Resolution							RESIDUAL RISK	
Ref	Hazard (Guideword)	Cause / Risk / Hazard	Consequence	Existing controls, if any	L	C	LR	Proposed Control (1 Eliminate, 2 Substitute, 3 Reduce, 4 Control)	L	C	LR	Risk Owner	Client Approved	Design Status	Date	Risk Owner	Action Required
1	**Construction Phase**																
1.01	*Movement Direction*	Machine working and moving constantly	Causing injury and/or death to personnel. Damage to existing surfaces.		3	4	H	Maintain a safe working area around moving plant All warning alarms and flags on vehicles/plant to be in working order and inspected daily before work starts. Workers to wear PPE. All visitors to report to the site office and get a safety induction before going onto site. Protect the surfaces from plant movement.	2	2	L	Client/Constructor		Closed		Contractor	Further mitigations to be detailed in the Contractors SSHSP and methodology.
1.02	*Position / Location*	Pipes may move/roll during delivery and unloading of pipes	Causing injury to personnel.		2	3	M	Select location to minimize potential for movement. Minimize height of the stockpile. Provide secure stockpile area for pipes and fittings. Follow manufacturers instructions.	1	2	L	Client/Constructor		Closed		Contractor	Further mitigations to be detailed in the Contractors SSHSP and methodology.
1.03	*Egress / Access*	Trench or pit collapse.	Labourers or machines trapped under soil causing injury and/or death to personnel.	Design pipes to have shallow grade to reduce trench depths.	2	4	H	Ground investigation data and information from previous watermain construction shall be provided. Use of shoring/shield/sheet piles. No load to be placed or moved near the edge of trench. Excavation to be inspected daily by competent person.	2	2	L	Detailed Designer/Client/Constructor		Closed		Contractor	Further mitigations to be detailed in the Contractors SSHSP and methodology.
1.04	*Egress / Access*	Confined spaces	Causing injury and/or death to personnel.		1	4	M	Undertake risk assessment and follow confined space entry procedures. Use accredited trained personnel. No smoking/mobile phone use, avoid sparking. Obtain excavation permit and follow trenching procedures. Address in JSA.	1	2	L	Client/Constructor		Closed		Contractor	Further mitigations to be detailed in the Contractors SSHSP and methodology.
1.05	*Heights / Depths*	People or animal falling into trench	Causing injury and/or death to personnel.	Design pipes to have shallow grade to reduce trench depths.	2	3	M	Erect security fence if open excavation to be left unattended or cover the excavation with suitable material i.e. steel plate if left unattended. No personnel movement across the trench. Where possible backfill trenches. Maintain communication with local residents, request notification on any planned stock movements.	2	2	L	Client/Constructor		Closed		Contractor	Further mitigations to be detailed in the Contractors SSHSP and methodology.
1.06	*Heights / Depths*	Falling people or objects into trenches	Causing injury and/or death to personnel.	Design pipes to have shallow grade to reduce trench depths.	2	4	H	Materials not to be placed or staked near the edge of trench. Keep safe distance from edge of trench. Workers to wear PPE. No rollable objects stored uphill from excavation. Max excavation of 2.5m	1	2	L	Client/Constructor		Closed		Contractor	Further mitigations to be detailed in the Contractors SSHSP and methodology.
1.07	*External safety interfaces*	Construction activity resulting in striking of existing buried services and thrust blocks. Possible watermain thrust block near Tiffen Lane and Tamumu Road intersection.	Causing injury and/or death to personnel. Damage to existing services/ stakeholder assets resulting in increased time and cost.	DBYD and existing services desktop investigation undertaken	2	4	H	Review services relocation design/as-built prior to construction, including existing thrust blocks. Learnings from the watermain construction have been passed on to from CHBDC to designers. Use of experienced staff in construction teams. Use of excavation permit system. DBYD and service proving (non-destructive digging) prior to construction.	1	4	M	Detailed Designer/Client/Constructor		Closed		Contractor	Further mitigations to be detailed in the Contractors SSHSP and methodology.
1.08	*External safety interfaces*	Working in proximity to overhead and underground power cables.	Risk of electrocution causing injury and/or death to personnel.	Design pipes alignment to keep safe distance from power cables.	2	4	H	Appropriate planning and risk assessment to be completed. Determine the location of underground services. If underground power cables are located in the vicinity, exercise extreme care while excavating. Consult power distributor and comply with requirements. Consider height limiting devices and correctly sized machinery.	1	4	M	Detailed Designer/Client/Constructor		Closed		Contractor	Further mitigations to be detailed in the Contractors SSHSP and methodology.
1.09	*Load / Force / Energy*	Lifting of pipework and equipment.	Causing injury to personnel.		3	3	H	Lifting equipment must be inspected and tagged/color-coded by a competent person. Exclusion zones must be set up prior to and during dismantling operations. Barricade the area where lifting operation is on going. Use of manageable pipe lengths for manual tasks.	1	3	M	Client/Constructor		Closed		Contractor	Further mitigations to be detailed in the Contractors SSHSP and methodology.
1.10	*Load / Force / Energy*	Defective material/inferior class of pipe causing pipe failure /collapse	Causing injury to personnel.		1	3	M	Visual inspection of material. Follow inspection and test plan. Structural calculation for buried pipes undertaken. Designer has specified heavy duty class pipes suitable for the given external loading and test pressure.	1	2	L	Detailed Designer/Constructor		Closed		Contractor	Further mitigations to be detailed in the Contractors SSHSP and methodology.
1.11	*Load / Force / Energy*	Pressure testing of pipework	Pipe/joint failure may cause body injuries	Use of welded and flanged joints to avoid out of balance thrusts and the need for thrust blocks	3	4	H	Appropriate submission and review of work method statements. Only competent person to perform the task adequately secure connecting pipes Not to exceed pipe operating pressure. Adequate support where a change in direction or reducer occurs.	2	3	M	Client/Constructor		Closed		Contractor	Further mitigations to be detailed in the Contractors SSHSP and methodology.
1.12	*External safety interfaces*	Public access to construction sites.	Causing injury and/or death to public.		2	4	H	Provide appropriate fencing or barricade as per site risk assessment. Apply appropriate signage and pedestrian control. Devise and implement system for site inspection and security.	1	3	M	Client/Constructor		Closed		Contractor	Further mitigations to be detailed in the Contractors SSHSP and methodology.
1.13	*External safety interfaces*	Construction access off public roads leads to traffic accidents	Traffic accident causing injury and/or death to public and/or personnel. Risk of overnight collision with plant on side of road.		1	5	H	Address as part of Construction Management Plan - Risk assessment and appropriate traffic management plan implemented by proven traffic management subcontractor, who is active in the local area. Keep area clean and clear of obstacles. No plant to be left in road berm overnight.	1	2	L	Client/Constructor		Closed		Contractor	Further mitigations to be detailed in the Contractors SSHSP and methodology.
1.14	*External safety interfaces*	Proximity to rail causes collision with rail movement and plant or staff.	Plant and people collision with train		3	5	E	Alignment is kept as far from tracks as possible and is compliant with KiwiRail requirements. No work within the railway track is required. Contractor to be aware of the close proximity to the rail and ensure controls are in place to stop plant and staff straying into the rail corridor.	1	5	H	Client/Constructor		Closed		Contractor	Further mitigations to be detailed in the Contractors SSHSP and methodology.

3255239 - Otane to Waipawa Wastewater Ring Main - Safety in Design Risk Assessment Register

Attendees at review meeting:

Beca: Alex Leo, Joel Ascan, Sophie Hunter

Scribe: **SH**
Approved By: **AL**
Stage of Project: **Stage 2 Detailed Design**

Project No: **3255239**
Date: **3 August 2020**
Revision: **Rev A**

RISKS ASSOCIATED WITH DESIGN ELEMENTS					Risk Matrix			PROPOSED & APPROVED MITIGATION MEASURES	Mitigated Risk & Resolution							RESIDUAL RISK	
Ref	Hazard (Guideword)	Cause / Risk / Hazard	Consequence	Existing controls, if any	L	C	LR	Proposed Control (1 Eliminate, 2 Substitute, 3 Reduce, 4 Control)	L	C	LR	Risk Owner	Client Approved	Design Status	Date	Risk Owner	Action Required
1.15	*External safety interfaces*	Work may require the construction of a railway crossing. Work around rail causes collision with rail movement and plant or staff.	Plant and people collision with train		4	5	E	Alignment now avoids crossing the railway removing the need for work in the rail corridor.	0	5		N/A		Closed		N/A	
1.16	*Timing*	High water level floods the trenches and/or excavations which impedes accessibility.	Requires dewatering and delays program.		3	1	L	Install appropriate environmental controls. Sequence construction works to avoid having open excavations during inclement weather.	2	1	L	Client/Contructor		Closed		Contractor	Further mitigations to be detailed in the Contractors SSHSP and methodology.
1.17	*Environmental conditions*	Encountering buried contaminants. Notably asbestos pipework present on Tamumu Road at Johnson Street.	Personnel exposed to contaminants causing illness.		3	4	H	AC Pipe from the Council GIS has been marked on the drawings and flagged as a hazard. Contractor will be required to address mitigations for working in proximity to the pipe. It is recommended that the asbestos risk is discussed in the daily toolbox talks.	1	2	L	Client/Contructor		Closed		Contractor	Further mitigations to be detailed in the Contractors SSHSP and methodology.
1.18	*Poor Ergonomics*	Manual handling and hand digging required	Injury to personnel.		3	2	M	Use personnel appropriately trained for tasks. To be mitigated by Contractor methodology.	2	2	L	Client/Contructor		Closed		Contractor	Further mitigations to be detailed in the Contractors SSHSP and methodology.
1.19	*Environmental conditions*	Construction noise	Nuisance to public.		4	1	M	Comply with EPA guidelines and council approvals. Contractor to mitigate in methodology.	4	1	M	Client/Contructor		Closed		Contractor	Further mitigations to be detailed in the Contractors SSHSP and methodology.
1.20	*Environmental conditions*	Stock movements	Collision, escape, stock falling into excavations		2	4	H	Early engagement with farmers. Strong communication from Contractor during construction. Utilise CHBDC's relationship with local residents to understand their requirements during construction.	1	4	M	Client/Contructor		Closed		Contractor	Communications plan to be developed between Client and Contractors. Plan will detail expected resident communication requirements.
1.21	*Load / Force / Energy*	Injury associated with use of high risk equipment (e.g. quick-cut saws, angle grinders etc)	Causing significant injury		3	3	H	Utilise personnel trained in safe use of equipment.	2	3	M	Client/Contructor		Closed		Contractor	Further mitigations to be detailed in the Contractors SSHSP and methodology.
1.22	*Timing*	Site left established over Christmas holiday leads to increased risks of traffic and pedestrian collision, theft and damage.	Risk to public, falling into open excavations, vandalism, injury.		2	4	H	Contractor will close all excavations and move plant and materials to a secure location.	1	2	L	Client/Contructor		Closed		Contractor	Further mitigations to be detailed in the Contractors SSHSP and methodology.
1.23	*Position / Location*	Proposed network in close proximity to existing underground services	Illness from exposure to unexpected wastewater service burst	Design pipes alignment to keep safe distance from existing pipes	2	4	H	Appropriate planning and risk assessment to be completed. Determine the location of underground services. Exercise extreme care while excavating.	1	3	M	Client/Contructor		Closed		Contractor	Further mitigations to be detailed in the Contractors SSHSP and methodology.
2	**Operation & Maintenance Phase**																
2.01	*External safety interfaces*	Public access to air valve and scour shaft.	Injury to public during discharge through exposure to high/fast flows	Use of Client's standard arrangement for lockable shaft cover to prevent access into the pipe	2	2	L	Consider additional fencing, grating, and signage to further limit access if vandalism/entry is an issue.	2	2	L	Client/Detailed Designer		Closed		Client	No further action at this stage. CHBDC may wish to consider further access controls if access issues arise.
2.02	*Environmental conditions*	Pipe breaking and contaminating water or stormwater assets.	Wastewater leakage into waterways and drains. Contaminating nearby watermain.		2	3	M	Minimum separation from watermain features has been followed where feasible. Crossing over the larger culverts is unavoidable, however these crossings have been design to avoid long length of parallel runs with stormwater pipes.	1	3	M	Client/Detailed Designer		Closed		Client	Contamination of SW assets remains a risk. Early identification and regular maintenance and inspection of the rising main will help mitigate this remaining risk.
2.03	*Environmental conditions*	Isolation valves failing to operate.	Poor isolation of flow in the existing conduit/aqueduct and scour offtakes during shutdown, leading to expose to water under pressure, and discharge of raw water to the environment		3	2	M	Client Ops to regularly exercise and maintain valves.	1	2	L	Client		Closed		Client	To be included as part of the brief to operations team.
2.04	*Position / Location*	Access to valves for maintenance	Damage to valve during maintenance. Risk of cars on road when accessing valves for maintenance causing serious harm or death	Air valves located in chambers.	2	5	H	Air and Scour valves have been positioned outside of road corridor in berm	1	5	H	Client/Detailed Designer		Closed		Client	The operations team will still be exposed to a residual traffic collision risk even when working in the berm. It is recommended that suitable traffic warnings and controls be included as
2.05	*Energy*	Maintenance of air valve	Risk of injury due to exposure of discharges from air valve	Isolation valve is provided to isolate the air valve	2	2	L	Make operations team aware of the requirement to isolate the air valve before conducting any maintenance.	2	1	L	Client		Closed		Client	To be included as part of the brief to operations team.
2.06	*External safety interfaces*	Proximity to rail causes collision with rail movement and maintenance personnel	Plant and people collision with train		3	5	E	Alignment is kept as far from tracks as possible and is compliant with KiwiRail requirements. No work within the railway track is required. Contractor to be aware of the close proximity to the rail and ensure controls are in place to stop plant and staff straying in to the rail corridor.	1	5	H	Client/Contructor		Closed		Contractor	Further mitigations to be detailed in the Contractors SSHSP and methodology.

Key;

C=	Consequence	1) Low 2) Moderate 3) Significant 4) Major 5) Critical
L=	Likelihood	1) Rare 2) Unlikely 3) Possible 4) Likely 5) Almost Certain
LR =	Level of Risk	L) Low M) Moderate H) High E) Extreme