Project Number: 3-C2144.01

Kairakau Water Supply

Options Assessment

19 May 2020

CONFIDENTIAL

Contract #C-1069

150 YEARS IN AOTEAROA

Contact Details

Stephanie Glenn

WSP
Opus House, 6 Ossian Street, Napier 4110
Private Bag 6019, Hawkes Bay Mail Centre, Napier 4142
+64 6 833 5100
+64 27 540 4134
stephanie.glenn@wsp.com

Document Details:

Date: 19 May 2020
Reference: 3C2144.01
Status: Second Issue

Prepared by
Stephanie Glenn

Reviewed by
Greg Birdling

Approved for release by
Dave Gardiner

Document History and Status

Revision	Date	Author	Reviewed by	Approved by	Status
01	01/05/2020	S Glenn	G Birdling	D Gardiner	First Issue
02	19/05/2020	S Glenn	G Birdling	D Gardiner	Second Issue

Revision Details

Revision	Details

Contents

List of Figures

List of Tables

Executive Summary

Central Hawke's Bay District Council (CHBDC) has engaged WSP to undertake an assessment of potential upgrade options to the Kairakau water supply. The objectives of this upgrade are to:

- Provide a safe water supply for residents that meets regulatory requirements.
- Provide a water supply which balances reliability, cost-effectiveness, and ease of operation.
- Increase the resilience of the supply and any benefits to the surrounding area generally, e.g. facilitating future growth.

The purpose of this report is to present our assessment, and to provide recommendations and cost estimates for the proposed upgrades.

Kairakau is a small coastal town in the Hawke's Bay, and comprises of primarily holiday homes with approximately 20 permanent residents and a camping ground. It can have up to 1,000 residents during peak holiday season.

Under the current scheme water is drawn from two separate sources, a bore and a spring. It is stored in raw water tanks before it is dosed with chlorine and pumped up to treated water tanks on the side of the hill above the town. It is then fed to the town via gravity mains. Each property has an onsite storage tank which is fed by rainwater and supplemented by Council supply.

In order to supply safe drinking water to the residents which meets the objectives above there are a number of items to be addressed. These are summarised below.

- The current reliable yield of both sources in summer conditions is not well understood. Council has reported that Kairakau historically ran short of water often during summer periods until water restrictions were introduced and the bore was redeveloped.
- In terms of water quality, the bore and spring are considered equivalent to surface water, so treatment is required to meet drinking-water standards.
- According to recent testing, the raw water is very hard (over 300 mg/L as $CaCO_3$) with *E. Coli* present, but without long-term data it is hard to determine if this is representative of the typical water quality. Also, there is no data available regarding the turbidity of the water which may affect the treatment upgrades required.
- There is no continuous monitoring of parameters to assess compliance with DWSNZ, nor an alarm system to indicate faults or failures of the supply.
- No site inspection has occurred to date to confirm the condition of the existing infrastructure. Our understanding is that there are some upgrades required to the spring well head and concrete treated water tank.
- The location of the raw water tanks is on private property which presents an ongoing access risk, and the bore and treated water tank sites are not currently fenced off from the public which makes them more vulnerable to tampering and/or vandalism.
- Connections to individual properties have an unrestricted supply controlled by a ballcock in the tank, which may result in high peak demands which could overwhelm the operating storage volume.
- Individual tanks are connected to rain water along with Council supply. Roof water is subject to contamination from sources such as such as bird and possum droppings, paint, as well as sea spray from the adjacent coast.

Based on this, four options have been identified and considered to upgrade the Kairakau water supply. These are:

- **Option 1:** Upgrade water treatment plant to meet DWSNZ; retain roof water; install restrictors to all properties to control peak demand.

- **Option 2:** Upgrade water treatment plant to meet DWSNZ; remove roof water; possibly add bore and storage to meet increased peak demands; install restrictors to all properties to control peak demand.
- **Option 3:** Decommission existing supply and put all properties on roof water only.
- **Option 4:** Decommission existing supply and put all properties on roof water only; add point-of-entry treatment and storage.

During preparations of this report Council suggested an option for a new water source on Te Apiti Road be investigated. Based on the data available there is enough water available to meet projected demand therefore we have not looked at this option. However, there remains some uncertainty over the reliable summer yield form the sources, and the contribution from rainwater. If there is insufficient water supply from these two sources the option of a new bore could be considered in the future.

In our view, Option 1 goes against the principles of safe drinking water and Option 3 does not meet the project objective of providing safe drinking-water for the community. There are significant uncertainties regarding the implementation of Option 4, as this requires the LGA consultative process to be followed; followed by ongoing maintenance of the point-of-entry treatment devices.

Based on the initial cost estimate, it is recommended Council proceed with Option 2 at an estimated cost of $466,000 (or $536,000 if additional storage and bore are required).

1 Introduction

1.1 General

Central Hawke's Bay District Council (CHBDC) has engaged WSP to undertake an assessment of potential upgrade options to the Kairakau water supply. The objectives of this upgrade are to:

- Provide a safe water supply for residents that meets regulatory requirements.
- Provide a water supply which balances reliability, cost-effectiveness, and ease of operation.
- Increase the resilience of the supply and any benefits to the surrounding area generally, e.g. facilitating future growth.

The purpose of this report is to present our assessment, and to provide recommendations and cost estimates for the proposed upgrades.

1.2 Background

Kairakau is a small coastal town in the Hawke's Bay, approximately 35 km south of Hastings. The town comprises primarily holiday homes, with some permanent residents; and a small camping ground. It is also a popular recreational destination for day visitors. Council's draft water safety plan tells us there are approximately 20 permanent residents in the town, with up to 1,000 residents during peak holiday seasons.

2 Current Scheme

2.1 Background

The Kairakau water supply scheme was installed in the mid 1950's, upgraded in the 1970s and expanded in 1993 to include the subdivision in Mananui Street, Kapiti Place and Brodie Place. A new subdivision was added in 2007 on John Ross Place. Originally, the scheme only serviced the camping ground and the adjoining (original) holiday homes as a supplement to roof water collection. Expansion of the scheme occurred as a result of pressure for development in the area.

The scheme currently supplies 83 properties and the camping ground (approximately 20 sites). Water is pumped from two sources at the base of an adjacent hill; a shallow bore off Kapiti Place, and a spring off Brodie Place. Water is stored in raw water tanks, located next to the spring on Kapiti Place, before it is dosed with liquid chlorine and pumped up to four treated water tanks on the hillside above 21 Kapiti Place. Water is fed to the town via gravity mains from three treated water tanks which service the general consumers, and a fourth tank which supplies the campground exclusively. Each property has its own on-site storage tank which is supplied primarily by roof water, and supplemented by the water supply scheme when there is a deficit of roof water.

Figure 2-1 : Location of Key Kairakau Water Supply Elements

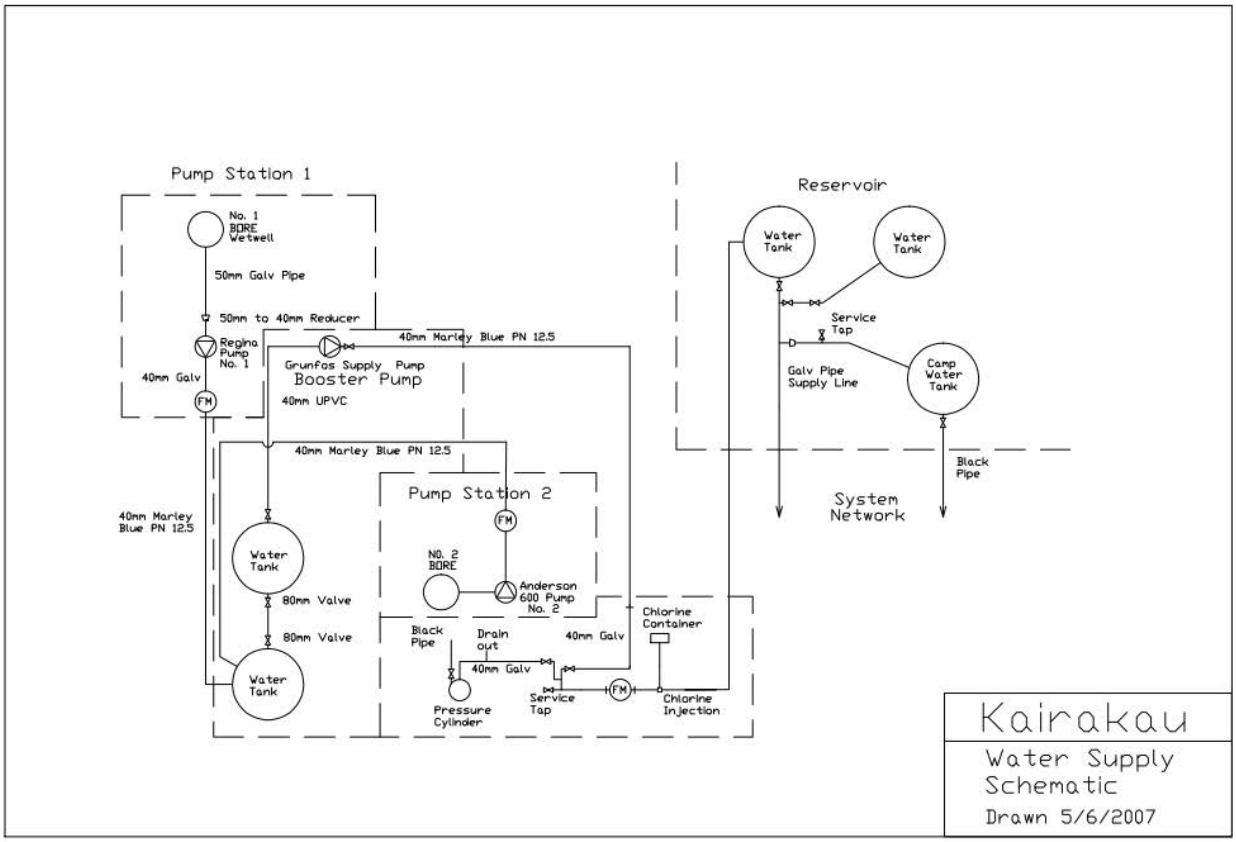

Figure 2-2 : Schematic of Kairakau Water Supply

2.2 Current Usage

Water consumption from the scheme is measured by water meters. This data is summarised for the past two years in the table below.

Table 2-1 : Water usage data for Kairakau for 2017/18 and 2018/19

Year	Avg Daily Demand (m^3/day)	Avg Summer Demand – Dec -Feb (m^3/day)	Avg Daily Demand During Peak Month (Jan) (m^3/day)	Total Year Demand (m^3)
2017/2018	20	32	42	7,215
2018/2019	28	35	36	10,267
Average	24	34	39	8,741

This level of water consumption is low for a residential area. Based on typical figures, we would expect a peak daily water consumption in the order of 50 m^3/day for a town this size.

There are a number of reasons which may explain Kairakau's low water consumption:

- All properties have on site storage which are also fed by rainwater.
- There is a high proportion of holiday homes which are unoccupied most of the year.
- Water restrictions are usually applied from early December until after Easter.

The volume of rainwater contributing to the supply at each individual property is unknown and is likely to be highly variable. We estimate that the rainwater contribution to the system is in the order of 20% of the current total usage.

Based on rainwater contribution of approximately 20%, a more reasonable estimate of daily demands is summarised in the table below.

Table 2-2 : Estimated average water demand for Kairakau for 2017/18 and 2018/19 including estimated rainwater collection

Year	Avg Daily Demand (m^3/day)	Avg Summer Demand – Dec -Feb (m^3/day)	Avg Daily Demand During Peak Month (Jan) (m^3/day)	Total Year Demand (m^3)
Average	29	41	47	10,489

One objective of an upgrade project is to facilitate some growth without compromising the reliability of the supply. Allowing for a growth factor of 20%, the estimated daily demands are summarised in the table below.

Table 2-3 : Estimated average water demand for Kairakau for 2017/18 and 2018/19 including a growth factor of 20%

Year	Avg Daily Demand (m^3/day)	Avg Summer Demand – Dec -Feb (m^3/day)	Avg Daily Demand During Peak Month (Jan) (m^3/day)	Total Year Demand (m^3)
Average	35	49	56	12,589

3 Issues and Options

3.1 Sources - Bore and Spring

The catchment which feeds the aquifer that the bore and spring draw water from has not been studied in depth by Council and is not well documented. A previous assessment of the catchment indicates it is pastoral and stocking rates low enough to be classed within the 4-log credit category. Council has a regime in place where it carries out annual testing of the raw water, and the latest results from November 2019 show that the raw water is very hard and contains low levels of *E. coli*.

The bore and pump station are located at the bottom of the hill on Council reserve off Kapiti Place, as indicated in Figure 2-1. Access to the bore is through Council reserve and the site is currently not fenced off, meaning it can be accessed by the general public.

The bore is consented to take up to 605 m^3 over a 7-day period at a maximum rate of 1 L/s. The bore was redeveloped in January 2020, and information available suggests that it has a sustainable yield of 0.7 L/s.

Figure 3-1 : Existing bore and pump shed

The spring, raw water tanks and pump station are located on an area of land behind 13 Brodie Place as indicated in Figure 2-1. The spring and pump station are located on Council land, but the raw water tanks are located on private property currently leased by Council. Access to the site is through private land and the site is currently fully fenced. The apron around the spring does not look to be in a good condition which may allow contamination into the supply.

Similarly to the bore, the spring has consent to take up to 420 m^3 in a seven-day period at a maximum rate of 0.7 L/s. A step drawdown test was undertaken for the spring in January 2020 and it indicated that the spring can be pumped reliably at a rate of up to 1.2 L/s.

In order to meet the projected average daily demand of 56 m^3/day during the peak month of January (including estimated rainwater collection and a 20% growth factor), the spring and bore would both need to operate for approximately 12 hours at a rate of 0.7 L/s (total of 1.4 L/s).

Figure 3-2 : Existing spring

Based on the data available there is enough water available to meet demand. However, there remains some uncertainty over the reliable summer yield form the sources, and the contribution from rainwater. If there is insufficient water supply from these two sources an additional bore may be required.

3.1.1 Issues with current source

- The current reliable yield of both sources in summer conditions is unknown. Council has reported that Kairakau historically ran short of water often during summer periods until water restrictions were introduced and the bore was redeveloped.
- In terms of water quality, the bore and spring are considered equivalent to surface water, so treatment is required to meet drinking-water standards.
- According to recent testing, the raw water is very hard (over 300 mg/L as $CaCO_3$) with *E. Coli* present, but without long-term data it is not known if this is representative of the typical water quality.
- The turbidity of the existing water sources is not known, and this may affect the treatment requirements.
- The bore head and spring well head have not been assessed to determine if they provide satisfactory protection from surface contaminants or the ingress of shallow groundwater. The bore was recently refurbished, but the available photographs suggest that there is some upgrade work required at the spring.
- The bore site is not currently fenced allowing access to the general the public.

3.1.2 Options for consideration

- Confirm the reliable yield of current sources in summer conditions.
- Confirm the treatment requirements to meet Drinking Water Standards New Zealand (DWSNZ), and upgrade treatment plant accordingly to provide community with safe drinking water. Council's previous assessment of the catchment indicated that 4-log credits may be required; following DWSNZ changes in 2018 this can be reduced to 2 credits if the wellheads are considered secure. Alternatively, we recommend that protozoa monitoring is undertaking which will almost certainly confirm a 3-log requirement which could be met using UV disinfection alone.

- Improve the security of the sources by fencing off key components and ensuring stormwater cannot enter.
- Decommission the supply and place town on rainwater tanks with potential for point-of-entry treatment and additional on-property storage.

3.2 Storage

There are four 25 m^3 tanks which store raw water from both the spring and the bore, giving a nominal 100 m^3 of raw water storage in total. The raw water tanks are located next to the spring, on private land leased by council, and access to them is through private land. The site is fully fenced, albeit with a low level of security.

Figure 3-3 : Raw water tanks, spring and pumping station

There are four treated water tanks including three 25 m^3 plastic tanks located on the side of the hill above 21 Kapiti Place which service general consumers, and one 20 m^3 concrete tank which is located nearby but further down the hill, and which feeds the campground exclusively. Access is limited, via a narrow farm track and the site is currently not fenced off. These tanks give a nominal 95 m^3 of treated water storage, however one of the plastic tanks has been damaged so only two of the plastic tanks are operational, meaning currently there is only a nominal 70m^3 of treated storage.

Figure 3-4 : Damaged treated water tank

Figure 3-5 : Concrete treated water tank which supplies campground

The current combined storage capacity is nominally 170m^3 and based on current usage data it would provide just over three days' worth of storage during peak summer demand in January. If the damaged treated water tank is replaced this will increase the nominal storage capacity to 195 m^3.

3.2.1 Issues with current storage

- Maximum storage capacity is not being utilised as one of the treated water tanks is damaged.
- The condition of the concrete tank is unknown so the reliability of it is unknown.
- The location of the raw water tanks is on private property which could cause Council issues in the future if the lease is not renewed and land can't be acquired.

- Historically Kairakau has run out of storage during the summer months until water restrictions were introduced, and the bore was upgraded. It is not known whether the storage will be sufficient to meet peak demand.

3.2.2 Options for consideration

- Replace damaged treated water tank to maximum existing storage capacity.
- Assess condition of concrete tank and repair/replace if necessary to provide security for treated water.
- Relocate raw water tanks onto Council reserve next to the bore site so council can be assured they will not have to acquire land or relocate in the future.
- If Kairakau does continue to run out of storage during peak demand, additional storage can be added.

3.3 Pumping Stations and Rising Mains

A site visit has not been undertaken so the condition of the pumping stations at the bore and spring are unknown.

The condition of the rising mains connecting this infrastructure is also unknown, however Council's online GIS indicates the following:

- Bore to raw water tanks: 40 MDPE rising main.
- Spring to raw water tanks: 50 MDPE rising main.
- Raw water tanks to treated water tanks: 40 MDPE rising main.

3.3.1 Issues with current pumping stations and mains

- The condition of existing pump stations and pumping mains are unknown.

3.3.2 Options for consideration

- Investigate condition of current infrastructure to determine its working condition and any upgrades that may be required so the system can operate more efficiently.

3.4 Treatment

Currently, water from the raw water tanks is chlorinated before it is pumped up the hill to the treated water reservoirs. Water is chlorinated by a peristaltic dosing pump using a sodium hypochlorite solution. The set dosing rate is calculated by the operator.

3.4.1 Issues with current treatment

- Current treatment for this supply does not comply with DWSNZ due to insufficient treatment log credits for protozoa removal, therefore it is a public health risk.
- Currently the chlorine dosing system is operated as a volumetric dosing rate set by the operator and there is no system to continuously monitor the level of chlorine in the water and alert the operator if it is insufficient.
- Dosing using high-strength hypochlorite solution is often unreliable due to gas-locking, and the solution strength degrades rapidly so is difficult to maintain an accurate dose.

3.4.2 Options for consideration

- Treatment plant upgrade to meet DWSNZ to provide the community with safe drinking water.
- Should chlorine be used for treatment the dosing system should be upgraded to an automated system with alarm, which adjusts dosing rate based on FAC. The use of low strength (1%) hypochlorite will improve the reliability of the dosing system.

3.5 Monitoring

Council carries out sampling of water quality throughout the system, but it does not meet DWSNZ requirements and the supply is unregistered.

3.5.1 Issues with current monitoring

- Currently does not comply with DWSNZ. No continuous monitoring of parameters to assess compliance with DWSNZ or alarm system to indicate if the water is not safe to drink.

3.5.2 Options for consideration

- Online, continuous monitoring of water quality parameters for selected treatment process as set out in DWSNZ. This will confirm water is safe to drink and enable maintenance interventions before supply to properties is affected.

3.6 Reticulation

Water is feed to Kairakau through gravity mains from the treated water tanks. The condition of the reticulation mains is unknown but Council's GIS system indicate that there are a combination of galvanised iron and PVC pipes.

Each property has an on-site tank ranging in size from 1,200 L – 3,000 L. These tanks are fed with roof water and an on-demand supply from Council via a ballcock. Council's requirements for these tanks are that there are to be no connections between the main and the tanks, and the properties are to be fed solely from these tanks with a customer-supplied pump system.

3.6.1 Issues with current reticulation

- The condition of infrastructure is unknown so areas where the pipe is in poor condition and/or where there is excessive leakage are not known.
- The flow to each property is unrestricted, so peak-hour demands may draw storage levels down rapidly.
- Tanks are connected to rainwater along with the Council supply. Roof water is subject to contamination from bird and possum droppings, paint, wind-blown material, and sea-spray (we note that one resident reported a "salty taste" to the water).

3.6.2 Options for consideration

- Identify critical areas where pipe upgrades are required to improve reliability of the reticulation system.
- Assess the leakage rates and undertake further leak detection if required to identify high leakage areas. Repair or replace leaking pipelines to decrease water lost through leakage.
- Install flow restrictors on properties to limit the peak flowrate into each property. This will reduce the risk of exceeding scheme capacity during peak demand times and provide equitable distribution of water to all properties.
- Disconnect property tanks from their rainwater source to reduce the risk of contaminated water entering the on-property water supply system.

4 Upgrade Options

Four options have been considered to upgrade the Kairakau water supply. These are:

- **Option 1:** Upgrade water treatment plant to meet DWSNZ; retain roof water; install restrictors to all properties to control peak demand.
- **Option 2:** Upgrade water treatment plant to meet DWSNZ; remove roof water; add bore and storage to meet increased peak demands (if required); install restrictors to all properties to control peak demand.
- **Option 3:** Decommission existing supply and put all properties on roof water only.
- **Option 4:** Decommission existing supply and put all properties on roof water only; add point-of-entry treatment and storage.

4.1 Outline of options

4.1.1 Option 1 & 2 – Upgrade of water treatment plant to meet DWSNZ,

Option 1 and 2 require an upgrade to the existing treatment plant to meet DWSNZ.

The extent of the upgrades required to meet DWSNZ and provide safe drinking water to the community needs to be confirmed. A key consideration is the log credit requirements for protozoa treatment of the supply. There are three possibilities:

- **2-log credits:** Upgrade the bore and spring wellheads to meet borehead security criterion 2 in the DWSNZ. This requires that the bore head and spring well head provide satisfactory protection from the ingress of surface water and contaminants, and the casing must not allow ingress of shallow groundwater.

  This will require investigation to determine if the refurbished bore meets this criterion and the extent of work required for the spring to meet this criterion.

  If this option is met, the most cost-effective protozoa control option is UV disinfection.

- **3-log credit criterion:** If the boreheads cannot meet security criterion 2, then regular protozoa monitoring can be used to determine the log credit requirement. Cryptosporidium monitoring over a 12-month period which indicates <0.75 oocysts per 10 litres.
- **4-log credit criterion:** If 4 log credits are required, then two barriers are required. In addition to UV, a validated 1 micron cartridge filter or similar device is also required to provide 4 log credits.

UV disinfection is the recommended treatment approach as it is cost effective, reliable and easy to operate and provides 3 log credits. In order to use UV disinfection, the turbidity of the water must not exceed 1 NTU for more than 5% of the time; and not exceed 2 NTU at any time. If the existing supply cannot meet this requirement, then additional filtration to reduce turbidity will be required. For a 2 or 3 log credit WTP, this does not need to be a validated filter, and it does not form part of the compliance monitoring requirements.

A 4 log WTP requires a second treatment stage. For a very small WTP such as this, a cartridge filter is usually the most cost-effective option. It is required to be validated to meet the DWSNZ requirements and provide the additional 1 log protection. In a 4 log WTP, the cartridge filter needs to be operated, monitored, and maintained in accordance with DWSNZ requirements.

It is recommended that a cartridge filter is included as a provisional item in case turbidity mitigation is required in any case.

A new chlorine dosing system will also be provided. This will use a dosing pump to deliver 1% sodium hypochlorite solution into the water using an automated dosing system to maintain a consistent dose. This will provide systemic protection against recontamination in the network (including some mitigation of contamination from roof water collection if this remains).

The treatment plant will require a new building (simple coloursteel shed) which we expect can be located on Council land next to the bore. Water will be pumped from the two sources into the raw water tanks (as the current scheme is), before it is treated and pumped up to the existing treated water tanks on the side of the hill. It will then be distributed to the community through the existing gravity mains.

We suggest that the water treatment plant is designed for a flow rate of at least 2 L/s. This will have little impact on the cost of the upgrades but will give capacity to provide for future growth.

In order to meet the monitoring requirements of the drinking water standards, a number of parameters must be monitored and recorded. For a UV and cartridge filtration treatment system with chlorination, these parameters include flow, turbidity, UV intensity, UVT, lamp outage, filter differential pressure, and free available chlorine. Some of this monitoring needs to be continuous (recorded at 1 minute intervals), and additional monitoring of things like tank levels, bore levels and pump operation/fault will facilitate improved operation and management of the supply. A data path for this monitoring system back to Council needs to be identified and confirmed, and this requires further investigation.

In addition to the plant upgrade there are a number of other items to be included which will increase the overall reliably and operation of the system. These are:

- Replace the damaged treated water tank to maximise storage capacity.
- Assess the condition of the concrete tank and repair/replace if necessary. This will increase the reliability of the tank
- Assess the condition of pump stations and pumping mains and upgrade where required.
- Fully fence the bore site and treated water tank site to prevent unauthorised access and protect assets from vandalism.

There are also a number of additional items which the Council should consider including as part of this upgrade. These are:

- Identify critical areas where pipe upgrades are required to improve reliability of the reticulation system.
- Assess the leakage rates and undertake further leak detection if required to identify high leakage areas. Repair or replace leaking pipelines to decrease water lost through leakage.
- Relocate the existing raw water tanks onto council land.

Figure 4-1 : Map of proposed location of new treatment plant and raw water tanks

Figure 4-2 : Indicative layout of new treatment building and relocated raw water tanks

4.1.2 Option 1 – Retain roof water

For this option roof water supply will be retained on each property. This will mean that demand on the Council supply remains similar in the short term. However, Council will still need to confirm that the current yield of the bore and spring are sufficient. Additional growth will increase the demand.

Although Council is providing a safe water supply to property boundaries, the supply to houses within the property is still subject to potential contamination from the roof water collected into tanks and plumbed into the supply. e.g. contamination from possum and bird droppings, lead based paint, or spray/dust deposited on the roof. This can compromise the safety of the drinking water to the extent that it would no longer meet the Ministry of Health's DWSNZ. Houses not supplied with potable drinking water will not meet the Building Act nor Health Act requirements and allowing for water delivered to the property to be subsequently contaminated is against the principles for safe drinking water.

Continued chlorination of the existing supply provides some level of mitigation against on-property contamination but does not meet DWSNZ requirements.

4.1.3 Option 2 – Remove roof water; possibly add a new bore and storage to meet increased peak demands

By removing roof water consumers will have safe drinking-water as the health risk from contaminants entering their domestic system from roof water is eliminated.

One of the issues that will likely arise from removing the roof water is that demand on the Council supply will increase. The extent of this increase is unknown, but likely to be in the order of 20%. There is the possibility that the spring and bore cannot meet this increased peak demand and an additional water source will be needed. If this was installed in conjunction with increased water storage, the scheme will have greater capacity to meet peak demands. Alternatively, installing flow restrictors on properties is an effective way to control the peak demand, giving certainty that there will be sufficient water available to all properties.

Another issue that may arise from the removal of the roof water is the dissatisfaction of customers due to the hardness of the water now that it is not with rain water, although the reported "salty taste" to the water will likely go away. Hardness is an aesthetic concern only, and not a health issue, but it may reduce the life of water heating elements and the effectiveness of soaps.

4.1.4 Option 3 – Decommission existing supply and put all properties on roof water only

This option is for Council to decommission the supply and move all properties to roof water supply only. One of the issues that will likely arise from this is a shortfall in demand. The contribution of rainwater to the system is unknown but it is unlikely that it will meet the full demand for each property, and it will probably be highly variable. We believe this is why the Council supply was originally developed.

Another issue is this is unlikely to be received well by the community given they currently have an on-demand council supply. Section 131 of the Local Government Act (LGA) regulates how a public water supply can be shut down. This process can be protracted if challenged.

The specific requirements to close down a small water source are:

1. The supply must service 200 or fewer persons who are ordinarily resident in the district, region, or other subdivision.
2. The Council must have consulted on the proposal with the Medical Officer of Health for the District.
3. Council must the make the following information publicly available in a balanced and timely manner:

(i) The views of the Medical Officer of Health; and

(ii) The information it received in the course of undertaking a review of the effects of the closure, and an assessment of the costs of providing an appropriate alternative service (Section 134(a) and (b) of LGA).

4. The proposal must be supported in a binding referendum by at least 75% of the votes cast.

While this LGA process is being undertaken, Council will still be under pressure to meet DWSNZ requirements.

In our view, this option does not meet the project objective of providing safe drinking-water for the community.

4.1.5 Option 4 – Decommission existing supply and put all properties on roof water only; provide point of entry treatment and storage

This option is for Council to decommission the supply and move all properties to roof water supply only and provide point-of-entry treatment at each dwelling. This would involve works on individual properties. Each property would need to have their storage requirements assessed and larger tanks may need to be installed at some properties. Equality would likely become an issue in this case so an option for council could be to contribute a sum of money to each property that can be put towards a new tank.

This option would also need to follow the LGA consultative process outlined in Option 3.

The ongoing maintenance of the treatment devices is an issue that would need to be resolved – if Council were to retain a role in this, then access arrangements etc. would need to be agreed for all properties.

The operation of the camping ground would also need to be considered under this option as rainwater harvesting may not be viable in which case would Council still supply the camping ground with water and would it be a non-potable supply.

5 Costing

A preliminary estimate of the costing is outlined below. A full breakdown is included in Appendix A.

These costing options are CAPEX costs only and do not include ongoing maintenance costs, any consenting requirements, land costs and professional fees. All costing is GST exclusive.

Table 5-1 : Preliminary costing for Option 1

Option 1: Upgrade water treatment plant to meet DWSNZ; retain roof water; install restrictors to all properties to control peak demand.	
Preliminary and General	$50,000
Treatment plant upgrade	$242,000
Installation of restrictors on all properties	$63,000
Relocate raw water tanks	$20,000
Upgrade chlorine dosing system	$20,000
Contingency	$50,000
TOTAL	**$445,000**

Table 5-2 : Preliminary costing for Option 2

Option 2: Upgrade water treatment plant to meet DWSNZ; remove roof water; possibly add bore and storage to meet increased peak demands; install restrictors to all properties to control peak demand.	
Preliminary and General	$50,000
Treatment plant upgrade	$242,000
Installation of restrictors on all properties	$63,000
Relocate raw water tanks	$20,000
Upgrade chlorine dosing system	$20,000
Disconnect houses from rainwater tanks (plumbing)	$21,000
Contingency	$50,000
Subtotal	**$466,000**
Additional Storage (provisional)	$20,000
Additional Bore (provisional)	$50,000
TOTAL	**$536,000**

Notes:

1. The treatment plant upgrade includes civil, mechanical, electrical and testing and commissioning. Included as provisional items are the cartridge filters, replacing the damaged treated water tank and remedial work on the concrete tank.

2. The costing assumes a simple facility consistent with the size of the township, including a coloursteel building, plastic tanks, basic siteworks and gravel entry.

3. The cost of additional bore would be largely dependent on how deep it is and how far away it is located. This estimate is based on it being similar in depth to the existing bores and located within 200m of the treatment building.

Table 5-3 : Preliminary costing for Option 3

Option 3: Decommission existing supply and put all properties on roof water only. 83 properties + campground.	
Preliminary and General	$12,000
Disconnect each property from Council supply (excavate, plug service, reinstatement in grass - $600/property)	$51,000
Contingency	$10,000
TOTAL	$73,000

Table 5-4 : Preliminary costing for Option 4

Option 4: Decommission existing supply and put all properties on roof water only; add point of entry treatment and storage. 83 properties.	
Preliminary and General	$60,000
Disconnect each property from Council supply (excavate, plug service, reinstatement in grass - $600/property)	$50,000
Treatment at each property (filter & plumbing on each property - $1,100/property)	$92,000
New tank on each property (tank & installation - $4,000/property)	$332,000
Campground – disconnect from Council supply (as above), treatment (as above) and two new 30m^3 storage tanks.	$19,000
Contingency	$40,000
TOTAL	$593,000

6 Recommendations

We recommend that:

1. Council monitors the yield of the bore and spring during summer to confirm there is enough water available to meet demand. If it looks like it is not enough a subsequent project should be to investigate adding an additional bore and/or storage.
2. The existing water treatment plant is upgraded to meet DWSNZ requirements.
3. Flow restrictors are installed on each property connection, and the roof water supply disconnected.
4. Security of sites is improved by fencing off key components.
5. Damaged treated water tank is replaced to maximise storage capacity.
6. Concrete tank is assessed and repaired/replaced if required to improve security of treated water.
7. Raw water tanks are relocated to Council land to eliminate access risk.
8. Council identify areas where pipe upgrades are required.
9. Council assess the leakage rates on reticulation and undertake further leak detection if required to identify high leakage areas.

Disclaimers and Limitations

This report ('**Report**') has been prepared by WSP exclusively for [Central Hawke's Bay District Council] ('**Client**') in relation to [Kairakau Water Supply Upgrade] ('**Purpose**') and in accordance with the [Short form Agreement with the Client dated 12/03/2020]. The findings in this Report are based on and are subject to the assumptions specified in the Report. WSP accepts no liability whatsoever for any reliance on or use of this Report, in whole or in part, for any use or purpose other than the Purpose or any use or reliance on the Report by any third party.

In preparing the Report, WSP has relied upon data, surveys, analyses, designs, plans and other information ('**Client Data'**) provided by or on behalf of the Client. Except as otherwise stated in the Report, WSP has not verified the accuracy or completeness of the Client Data. To the extent that the statements, opinions, facts, information, conclusions and/or recommendations in this Report are based in whole or part on the Client Data, those conclusions are contingent upon the accuracy and completeness of the Client Data. WSP will not be liable in relation to incorrect conclusions or findings in the Report should any Client Data be incorrect or have been concealed, withheld, misrepresented or otherwise not fully disclosed to WSP.

Appendix A
Preliminary Costing

Options 1 & 2 - Upgrade water treatment plant to meet DWSNZ

ITEM	DESCRIPTION	UNIT	QTY	RATE	AMOUNT
Treatment Plant Upgrade					
1	**Civil**				
1.1	Access including fence and gate	LS	1	$ 5,000.00	$ 5,000.00
1.2	Treatment building 6x4m	LS	1	$ 30,000.00	$ 30,000.00
1.3	Site pipelines	LS	1	$ 10,000.00	$ 10,000.00
1.4	Backwash disposal	LS	1	$ 25,000.00	$ 25,000.00
1.5	Refurbish spring including apron and new casing	LS	1	$ 6,500.00	$ 6,500.00
					$ 76,500.00
2	**Mechanical**				
2.1	Booster pumps	LS	1	$ 12,000.00	$ 12,000.00
2.2	UV Plant	LS	1	$ 15,000.00	$ 15,000.00
2.3	Pipework and valves	LS	1	$ 10,000.00	$ 10,000.00
2.4	Flowmeters	ea	2	$ 8,500.00	$ 17,000.00
2.5	Pressure transmitters	ea	3	$ 3,000.00	$ 9,000.00
					$ 63,000.00
3	**Electrical**				
3.1	New control panel	LS	1	$ 60,000.00	$ 60,000.00
3.2	Site wiring	LS	1	$ 10,000.00	$ 10,000.00
3.3	Programming	LS	1	$ 5,000.00	$ 5,000.00
					$ 75,000.00
4	**Testing and Commissioning**				
4.1	Subsystem Testing	LS	1	$ 5,000.00	$ 5,000.00
4.2	Systemic testing	LS	1	$ 2,000.00	$ 2,000.00
4.3	Commissioning	LS	1	$ 2,000.00	$ 2,000.00
4.4	As-built information	LS	1	$ 1,000.00	$ 1,000.00
					$ 10,000.00
5	**Provisional**				
5.1	Cartridge filters	LS	1	$ 10,000.00	$ 10,000.00
5.2	Replace treated water tank - 25m3 plastic	LS	1	$ 4,000.00	$ 4,000.00
5.3	Concrete tank remedial work	LS	1	$ 3,000.00	$ 3,000.00
					$ 17,000.00
				Total	**$ 241,500.00**
6	**Other**				
6.1	Installation of restrictors on all properties	ea	83	$ 750.00	$ 62,250.00
6.2	Relocate raw water tanks	LS	1	$ 20,000.00	$ 20,000.00
6.3	Upgrade Chlorine Dosing system	LS	1	$ 20,000.00	$ 20,000.00
6.4	Disconnect houses from rain water tanks - plumbing	ea	83	$ 250.00	$ 20,750.00
6.5	Additional Storage				
6.5.1	Tanks x2	LS	1	$ 16,000.00	$ 16,000.00
6.5.2	Pipework	LS	1	$ 4,000.00	$ 4,000.00
				Subtotal Storage	*$ 20,000.00*
6.6	Additional Bore				
6.6.1	Drill bore, install casing, bore head, concrete apron	LS	1	$ 10,000.00	$ 10,000.00
6.6.2	Pump	LS	1	$ 8,000.00	$ 8,000.00
6.6.3	Site pipework	LS	1	$ 6,000.00	$ 6,000.00
6.6.4	Site security + Miscellaneous	LS	1	$ 10,000.00	$ 10,000.00
6.6.5	Pipework to raw water tanks (40MDPE rising main)	m	200	$ 80.00	$ 16,000.00
				Subtotal Bore	*$ 50,000.00*
7	**Contingency**	CS	1	$ 50,000.00	**$ 50,000.00**

	Option 1 - Upgrade water treatment plant to meet DWSNZ; retain roof water; install restrictors to all properties to control peak demand.				
	Preliminary and General				$ 50,000.00
	Treatment Plant upgrade				$ 242,000.00
	Installation of restrictors on all properties				$ 63,000.00
	Relocate raw water tanks				$ 20,000.00
	Upgrade Chlorine Dosing system				$ 20,000.00
	Contingency				$ 50,000.00
				TOTAL OPTION 1	**$ 445,000.00**
	Option 2 - Upgrade water treatment plant to meet DWSNZ; remove roof water; possibly add bore and storage to meet increased peak demands; install restrictors to all properties to control peak demand.				
	Preliminary and General				$ 50,000.00
	Treatment Plant upgrade				$ 242,000.00
	Installation of restrictors on all properties				$ 63,000.00
	Relocate raw water tanks				$ 20,000.00
	Upgrade Chlorine Dosing system				$ 20,000.00
	Disconnect houses from rain water tanks - plumbing				$ 21,000.00
	Contingency				$ 50,000.00
				Subtotal	$ 466,000.00
	Additional Storage				$ 20,000.00
	Additional Bore				$ 50,000.00
				Subtotal	$ 70,000.00
				TOTAL OPTION 2	**$ 536,000.00**

Options 3 & 4 - Decommission Council Supply

ITEM	DESCRIPTION	UNIT	QTY	RATE	AMOUNT
1	**General**				
1.1	Disconnect each property from mains (digging, capping main, rei	ea	83	$ 600.00	$ 49,800.00
1.2	Campground	ea	1	$ 600.00	$ 600.00
				Total	**$ 50,400.00**
2	**Individual Properties**				
2.1	*Properties treatment and storage*				
2.1.1	Treatment filter	ea	83	$ 600.00	$ 49,800.00
2.1.2	New 25m3 tank on each property	ea	83	$ 4,000.00	$ 332,000.00
2.1.3	Plumbing	ea	83	$ 500.00	$ 41,500.00
				Subtotal properties	$ 423,300.00
2.2	*Campground*				
2.2.1	Treatment filter	ea	1	$ 1,000.00	$ 1,000.00
2.2.2	New 30m3 tanks (x2) (tanks, prep, foundation)	ea	2	$ 8,000.00	$ 16,000.00
2.2.3	Plumbing	ea	1	$ 2,000.00	$ 2,000.00
				Subtotal campground	$ 19,000.00
3	**Contingency**	CS	1	$ 10,000.00	**$ 10,000.00**
	Option 3: Decommission existing supply and put all properties on roof water only.				
	Preliminary and General				$ 12,000.00
	Disconnect each property from mains (digging, capping main, reinstatement)				$ 51,000.00
	Contingency				$ 10,000.00
				TOTAL OPTION 3	**$ 73,000.00**
	Option 4: Decommission existing supply and put all properties on roof water only; add point of entry treatment and storage.				
	Preliminary and General				$ 60,000.00
	Disconnect each property from mains (digging, capping main, reinstatement)				$ 50,000.00
	Treatment and plumbing				$ 92,000.00
	Storage - new tank				$ 332,000.00
	Campground				$ 19,000.00
	Contingency				$ 40,000.00
				TOTAL OPTION 4	**$ 593,000.00**

Appendix B
Copy of Bore and Spring Resource Consents

BORE

Consent No. WP090153T

Kapiti

HAWKE'S BAY
REGIONAL COUNCIL

RESOURCE CONSENT

Water Permit

In accordance with the provisions of the Resource Management Act 1991, and subject to the attached conditions, the Hawke's Bay Regional Council (the Council) grants a resource consent for a discretionary activity to:

Central Hawkes Bay District Council
PO Box 127
Waipawa 4240

to take water from well no. 3130 (100 mm diameter) to provide a public water supply at Kairakau Beach.

LOCATION

Address of site
Brodie Place, Kairakau Beach

Legal description
Site of take: Lot 29 DP 20914
Site of use: Various

Map reference
Well 3130: V22 2845486 6132787

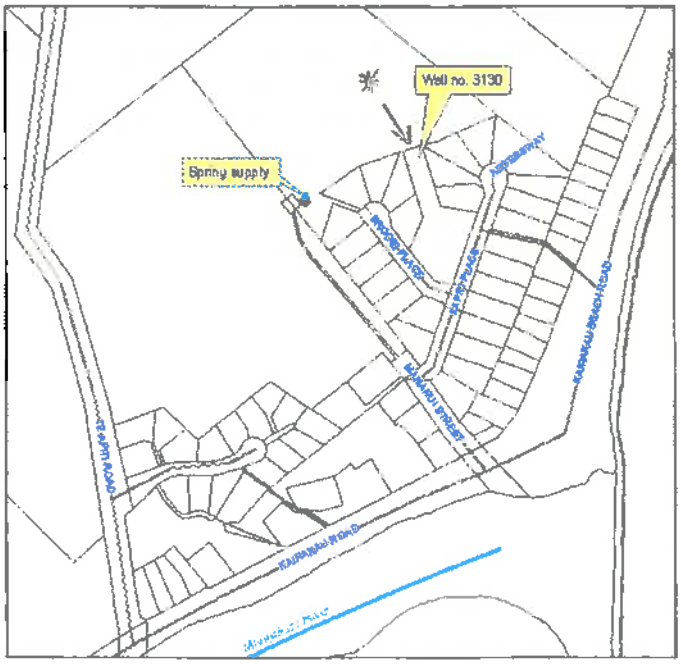

CONSENT DURATION

This consent is granted for a period expiring on 31 May 2029.

LAPSING OF CONSENT

This consent shall lapse in accordance with s.125 on 31 May 2014 if it is not exercised before that date.

Yolanda Morgan
RESOURCE MANAGEMENT GROUP
Under authority delegated by Hawke's Bay Regional Council.
24th November 2009

CONDITIONS

1. The rate of taking shall not exceed 1 litre per second.

2. The volume taken shall not exceed 605 cubic metres in any 7-day period (i.e. at the maximum rate authorised in condition 1, taking should normally be less than, and never exceed 168 hours per week).

3. A water measuring device shall be installed prior to the exercise of this consent, and maintained to measure the volume of water taken to an accuracy of +/- 5%. The device shall be installed at the point of take and in accordance with the manufacturer's specifications.

4. If any type of water measuring device other than a water meter is to be installed, the consent holder shall demonstrate to the Council (Manager Compliance), prior to installation, that the device will meet the required accuracy criteria once installed and at all times when water is being taken.

5. If a water meter is installed it shall have an international accreditation or equivalent New Zealand calibration endorsement for use with an electronic recording device.

6. The meter must be supplied from a manufacturer compliant with Australian Standard/New Zealand Standard (AS/NZS) 9001 – Quality Management Systems.

7. For the purpose of testing the accuracy of a water measuring device using a portable flow meter, all water taken shall pass through a straight length of pipe. The straight length of pipe should be immediately before or after the water measuring device. The length of the pipe shall be no shorter than the equivalent of 15 times the pipe diameter or a shorter length with approval from Council (Manager Compliance) (See advice note 2).

8. The water measuring device, installed as required by condition 3, must be capable of interfacing with a data storage device, that can either:

   a) record the volume of water used every 15 minutes; or

   b) record a date/time stamp every 10m3 of water taken.

9. From the date the consent is first exercised the water measuring device shall be read at 7-day intervals throughout each year.

10. The consent holder shall provide the Council with a record of:

    a) the meter reading (in cubic metres).

    b) the volume of water taken in each 7-day period (in cubic metres).

    c) the date and time of each reading.

11. For the period 1 October to 31 May each year, the consent holder shall provide the information listed in condition 11 no later than 7 days after the end of each month. (See advice note).

12. For the period 1 June to 30 September, the consent holder shall provide the information listed in condition 11 no later than 7 days after the 30 September.

13. The consent holder shall undertake all operations in accordance with any drawings, specifications, statements of intent and other information supplied as part of the application for this resource consent. In the event that there is conflict between the information supplied with the application and any consent condition(s), the condition(s) shall prevail.

Review of Consent Conditions by the Council

The Council may review conditions of this consent pursuant to sections 128, 129, 130, 131 and132 of the Resource Management Act 1991. The actual and reasonable costs of any review undertaken will be charged to the consent holder, in accordance with s.36(1) of the Resource Management Act.

Times of service of notice of any review: During the month of May, of any year.

Purposes of review:

To deal with any adverse effect on the environment which may arise from the exercise of this consent, which it is appropriate to deal with at that time or which became evident after the date of issue.

To modify any monitoring programme, or to require additional monitoring if there is evidence that current monitoring requirements are inappropriate or inadequate.

To ensure that the volume of water authorised by the consent is consistent with actual water needs and is physically able to be taken.

To require, if necessary, the installation of a backflow prevention device to ensure that no contaminant can enter the aquifer through the bore.

Reasons for Decision

The activity will have minor actual or potential adverse effects on the environment and is not contrary to any relevant plans or policies. The activity is also consistent with the purpose and principles of the Resource Management Act 1991.

Advice Notes

Water meter installation

1. Fittings required on well headworks such as water meters and backflow preventers require straight lengths of pipe either side in order to function properly. Please refer to the manufacturer's specifications for the specific dimensions necessary for each device before any modifications are made to well headworks.
2. The required length of pipe for compliance testing of water measuring device accuracy should, preferably, be above ground and located immediately 'upstream' of the water measuring device. If this is not practical, the length of pipe could be located below ground or immediately 'downstream' of the water measuring device and other fittings. If located underground, the consent holder will be required to excavate a hole around the pipe on receiving notice of any compliance testing.

Water take records

3. Where no water is taken over a long period (say more than 3 months) the Manager Regulation may authorise that records be provided at intervals exceeding one month.

Wellhead construction

4. To minimise the risk of contaminants entering groundwater, well headworks are required to be constructed to ensure that there are no openings through which contaminants might enter the well. This would include ensuring that there are no gaps around pipework and cables at the wellhead.

MONITORING NOTE

Routine monitoring

Routine monitoring inspections will be undertaken by Council officers at a frequency of no more than once every year to check compliance with the conditions of the consent. The costs of **any** routine monitoring will be charged to the consent holder in accordance with the Council's Annual Plan of the time.

Non-routine monitoring

"Non routine" monitoring will be undertaken if there is cause to consider (e.g. following a complaint from the public, or routine monitoring) that the consent holder is in breach of the conditions of this consent. The cost of non-routine monitoring will be charged to the consent holder in the event that non-compliance with conditions is determined, or if the consent holder is deemed not to be fulfilling the obligations specified in section 17(1) of the Resource Management Act 1991 (RMA) shown below.

Section 17(1) of the RMA 1991 states:

> *Every person has a duty to avoid, remedy, or mitigate any adverse effect on the environment arising from an activity carried on, by or on behalf of that person, whether or not the activity is in accordance with a rule in a plan, a resource consent, section 10, section 10A, or section 20.*

Consent Impact Monitoring

In accordance with section 36 of the RMA (which includes the requirement to consult with the consent holder) the Council may levy additional charges for the cost of monitoring the environmental effects of this consent, either in isolation or in combination with other nearby consents. Any such charge would generally be set through the Council's Annual Plan process.

DEBT RECOVERY

It is agreed by the consent holder that it is a term of the granting of this resource consent that all costs incurred by the Hawke's Bay Regional Council for, and incidental to, the collection of any debt relating to the monitoring of this resource consent shall be borne by the consent holder as a debt due to the Council, and for that purpose the Council reserves the right to produce this document in support of any claim for recovery.

CONSENT HISTORY

Consent No. (Version)	Date	Event	Relevant Rule Number	Relevant Rule Plan
WP090153T	24/11/09	Consent initially granted	55 34	Regional Resource Management Plan Proposed Regional Coastal Environment Plan

SPRING/WELL

Consent No. WP090166T

BRODIE

HAWKE'S BAY
REGIONAL COUNCIL

RESOURCE CONSENT

Water Permit

In accordance with the provisions of the Resource Management Act 1991, and subject to the attached conditions, the Hawke's Bay Regional Council (the Council) grants a resource consent for a discretionary activity to:

Central Hawke's Bay District Council
PO Box 127
Waipawa 4240

to take water from a shallow spring fed well to provide a public water supply at Kairakau Beach.

LOCATION

Address of site
Brodie Place (off Kapiti Place) ,
Kairakau Beach

Legal description
Site of take: Lot 30 DP20914 BLK IV Waimarama SD
Site of use: Various

Map reference
V22 2845391 6132741

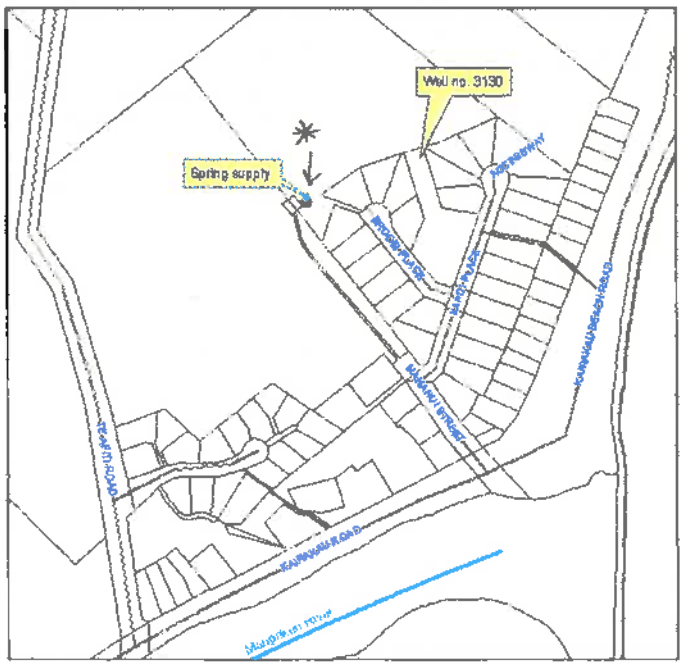

CONSENT DURATION

This consent is granted for a period commencing and expiring on 31 May 2029.

LAPSING OF CONSENT

This consent shall lapse in accordance with s.125 on 31 May 2014 if it is not exercised before that date.

Yolanda Morgan
RESOURCE MANAGEMENT GROUP
Under authority delegated by Hawke's Bay Regional Council.
20 November 2009

CONDITIONS

1. The rate of taking shall not exceed **0.7 litres per second**.

2. The volume taken shall not exceed **420 cubic metres in any 7-day period** (i.e. at the maximum rate authorised in condition 1, taking should normally be less than, and never exceed 167 hours per week).

3. The consent holder shall undertake all operations in accordance with any drawings, specifications, statements of intent and other information supplied as part of the application for this resource consent. In the event that there is conflict between the information supplied with the application and any consent condition(s), the condition(s) shall prevail.

REVIEW OF CONSENT CONDITIONS BY THE COUNCIL

The Council may review conditions of this consent pursuant to sections 128, 129, 130, 131 and132 of the Resource Management Act 1991. The actual and reasonable costs of any review undertaken will be charged to the consent holder, in accordance with s.36(1) of the Resource Management Act.

Times of service of notice of any review: During the month of May, of any year.

Purposes of review:

To deal with any adverse effect on the environment which may arise from the exercise of this consent, which it is appropriate to deal with at that time or which became evident after the date of issue.

To require the adoption of the best practicable option to remove or reduce any effects on the environment.

To require the installation and reading of a water-measuring device.

To modify any monitoring programme, or to require additional monitoring if there is evidence that current monitoring requirements are inappropriate or inadequate.

To ensure that the volume of water authorised by the consent is consistent with actual water needs and is physically able to be taken.

REASONS FOR DECISION

The activity will have minor actual or potential adverse effects on the environment and is not contrary to any relevant plans or policies. The activity is also consistent with the purpose and principles of the Resource Management Act 1991.

MONITORING NOTE

Routine monitoring

Routine monitoring inspections will be undertaken by Council officers at a frequency of no more than once every 2 years to check compliance with the conditions of the consent. The costs of **any**

routine monitoring will be charged to the consent holder in accordance with the Council's Annual Plan of the time.

Non-routine monitoring

"Non routine" monitoring will be undertaken if there is cause to consider (e.g. following a complaint from the public, or routine monitoring) that the consent holder is in breach of the conditions of this consent. The cost of non-routine monitoring will be charged to the consent holder in the event that non-compliance with conditions is determined, or if the consent holder is deemed not to be fulfilling the obligations specified in section 17(1) of the Resource Management Act 1991 (RMA) shown below.

Section 17(1) of the RMA 1991 states:

> *Every person has a duty to avoid, remedy, or mitigate any adverse effect on the environment arising from an activity carried on, by or on behalf of that person, whether or not the activity is in accordance with a rule in a plan, a resource consent, section 10, section 10A, or section 20.*

Consent Impact Monitoring

In accordance with section 36 of the RMA (which includes the requirement to consult with the consent holder) the Council may levy additional charges for the cost of monitoring the environmental effects of this consent, either in isolation or in combination with other nearby consents. Any such charge would generally be set through the Council's Annual Plan process.

Debt Recovery

It is agreed by the consent holder that it is a term of the granting of this resource consent that all costs incurred by the Hawke's Bay Regional Council for, and incidental to, the collection of any debt relating to the monitoring of this resource consent shall be borne by the consent holder as a debt due to the Council, and for that purpose the Council reserves the right to produce this document in support of any claim for recovery.

CONSENT HISTORY

Consent No. (Version)	Date	Event	Relevant Rule Number	Relevant Rule Plan
WP090166T	24/11/2009	Consent initially granted.	55	Regional Resource Management Plan
			34	Proposed Regional Coastal Environment Plan

Appendix C
Copy of Bore and Spring Raw Water Testing Results

Water Testing Hawkes Bay (2016) Ltd

watertesting HAWKES BAY

Central Hawkes Bay District Council
PO Box 127
Waipawa
4240

Attention: Karen Bothwell

Results Report

Batch Number: 19/16909

Issue: 1

14 November 2019

Sample	Site	Map Ref.	Date Sampled	Date Received	Order No.
19/16909-01	Potable Water		04/11/2019 09:30	04/11/2019 15:38	0

Notes: Kairakau Kapiti Pl Bore

	Test Code	Result	Units	Test Date	Comments	Validated By
H-1004	Temperature on arrival	7.7	Deg C	04/11/2019		Rowena Houghton KTP
H-M0414	Total Coliforms	78.2	MPN/100mL	04/11/2019	DWSNZ test	Gurpreet Kaur KTP
H-M0415	E. coli	1.0	MPN/100mL	04/11/2019	Fails MAV Limit of 0	Gurpreet Kaur KTP
HS-0002	Suspended Solids - Total	< 5 **	g/m³			Eurofins Wg Import
HS-0040	Total (NP) Organic Carbon	0.9 **	g/m³			Eurofins Wg Import
HS-0052	Alkalinity - Total	280 **	g CaCO3/m³			Eurofins Wg Import
HS-0055	Conductivity at 25°C	85.6 **	mS/m			Eurofins Wg Import
HS-0602	Chloride	79.0 **	g/m³			Eurofins Wg Import
HS-0604	Bromide	0.25 **	g/m³			Eurofins Wg Import
HS-0605	Nitrate - Nitrogen	0.75 **	g/m³			Eurofins Wg Import
HS-0607	Sulphate	26.7 **	g/m³			Eurofins Wg Import
HS-0701	Fluoride	0.098 **	g/m³			Eurofins Wg Import
HS-0755B	Filtered Absorbance at 254 nm	0.03 **				Eurofins Wg Import
HS-1769	Iron - Total	0.026 **	g/m³			Eurofins Wg Import
HS-6043	Total Hardness	285 **	g CaCO3/m³			Eurofins Wg Import
HS-6603	Arsenic - Total	< 0.002 **	g/m³			Eurofins Wg Import
HS-6607	Boron - Total	0.06 **	g/m³			Eurofins Wg Import
HS-6608	Cadmium - Total	< 0.001 **	g/m³			Eurofins Wg Import
HS-6610	Calcium - Total	100 **	g/m³			Eurofins Wg Import
HS-6618	Lead - Total	0.003 **	g/m³			Eurofins Wg Import
HS-6620	Magnesium - Total	8.5 **	g/m³			Eurofins Wg Import
HS-6621	Manganese - Total	< 0.001 **	g/m³			Eurofins Wg Import
HS-6626	Potassium - Total	2.50 **	g/m³			Eurofins Wg Import
HS-6631	Sodium - Total	63.1 **	g/m³			Eurofins Wg Import
P1855B	Aqueous Total Metal Digestion	Completed **				Eurofins Wg Import

Comments:

** See attached Subcontracting Laboratory document

Sampled by customer using WTHB approved containers.

All samples analysed as we receive them. Delivery was within the correct time and/or temperature condition

Comments on Individual Test Results

Total Coliforms

Coliforms are a broad class of bacteria found in our environment, not all of which present a risk to public health. Total coliforms include bacteria that are found

1105 Plunket Street St Leonards
Hastings 4120 New Zealand
Phone: (06) 870 6449 Fax:
Email: info@watertestinghb.nz Website: http://www.watertestinghb.co.nz

in the soil, in water that has been influenced by surface water, and in human or animal waste. The DWSNZ does not include a Maximum Value for total coliforms and a high total coliform reading does not necessarily pose a risk to human health. However, total coliforms are a useful indicator of drinking-water quality and may detect abnormalities and changes in quality over time.

E. coli

In the DWSNZ E. coli is used as an indicator organism for contamination of drinking water by faecal material. It is impractical to monitor water supplies for all potential human pathogens. Additionally, to be considered safe to drink the DWSNZ determine that water must not exceed Maximum Acceptable Values (MAV) for a range of chemicals. The standards also give Guideline Values (GV) for other chemicals, which if exceeded may impact on the taste, odour and colour of the water, but have no direct impact on the water safety.

Test Methodology:

Test	Methodology	Detection Limit
Total Coliforms	APHA 23rd Edition Method 9223B by Colilert Quantitray	1 MPN/100mL
E. coli	APHA 23rd Edition Method 9223B by Colilert Quantitray	1 MPN/100mL
Suspended Solids - Total	APHA 23rd Edition Online Method 2540 D	3 g/m³
Total (NP) Organic Carbon	Total Non-Purgeable Organic Carbon using TOC analyser. APHA 23rd Edition Online 5310B,C, ASTM D2579, D4839.	0.1 g/m³
Alkalinity - Total	APHA 23rd Edition Online Method 2320 B	1 g CaCO3/m³
Conductivity at 25°C	APHA 23rd Edition Online Method 2510 B.	0.1 mS/m
Chloride	Ion Chromatography following USEPA 300.0 (modified).	0.02 g/m³
Bromide	Ion Chromatography following USEPA 300.0 (modified)	0.02 g/m³
Nitrate - Nitrogen	Ion Chromatography following USEPA 300.0 (modified).	0.01 g/m³
Sulphate	Ion Chromatography following USEPA 300.0 (modified).	0.02 g/m³
Fluoride	Ion Chromatography following USEPA 300.0 (modified)	0.005 g/m³
Filtered Absorbance at 254 nm	In house method. Absorbance measured after filtration through 0.45micron	0.01
Iron - Total	ICP-OES following APHA 23rd Edition Online Method 3120 B (modified)	0.013 g/m³
Total Hardness	ICP-MS following APHA 23rd Edition Online method 3125 (modified).	1 g CaCO3/m³
Arsenic - Total	ICP-MS following APHA 23rd Edition Online method 3125 (modified)	0.002 g/m³
Boron - Total	ICP-MS following APHA 23rd Edition Online method 3125 (modified)	0.05 g/m³
Cadmium - Total	ICP-MS following APHA 23rd Edition Online method 3125 (modified)	0.001 g/m³
Calcium - Total	ICP-MS following APHA 23rd Edition Online method 3125 (modified)	0.1 g/m³
Lead - Total	ICP-MS following APHA 23rd Edition Online method 3125 (modified)	0.001 g/m³
Magnesium - Total	ICP-MS following APHA 23rd Edition Online method 3125 (modified)	0.1 g/m³
Manganese - Total	ICP-MS following APHA 23rd Edition Online method 3125 (modified)	0.001 g/m³
Potassium - Total	ICP-MS following APHA 23rd Edition Online method 3125 (modified)	0.1 g/m³
Sodium - Total	ICP-MS following APHA 23rd Edition Online method 3125 (modified)	0.1 g/m³
Aqueous Total Metal Digestion	Follows APHA 22nd Edition Method 3030E (modified) using nitric acid.	n/a

Onsite Observation Methodology:

Test	Methodology	Detection Limit
Temperature on arrival	Dedicated Thermometer following APHA 23rd Edition Method 2550 B	0.1 Deg C

"<" means that no analyte was found in the sample at the level of detection shown. Detection limits are based on a clean matrix and may vary according to individual sample.

g/m3 is the equivalent to mg/L and ppm.

Samples will be retained for a period of time, in suitable conditions appropriate to the analyses requested.

All test methods and confidence limits are available on request. This report must not be reproduced except in full, without the written consent of the laboratory.

Report Released By

Rowena Houghton

1105 Plunket Street St Leonards
Hastings 4120 New Zealand
Phone: (06) 870 6449 Fax:
Email: info@watertestinghb.nz Website: http://www.watertestinghb.co.nz

1105 Plunket Street St Leonards

Hastings 4120 New Zealand

Phone: (06) 870 6449 Fax:

Email: info@watertestinghb.nz Website: http://www.watertestinghb.co.nz

Water Testing Hawkes Bay (2016) Ltd

watertesting HAWKES BAY

Central Hawkes Bay District Council
PO Box 127
Waipawa
4240

Attention: Karen Bothwell

Results Report

Batch Number: 19/16753

Issue: 1

11 November 2019

Sample	Site	Map Ref.	Date Sampled	Date Received	Order No.
19/16753-01	Potable Water		31/10/2019 10:10	31/10/2019 15:20	0

Notes: Kairakau Brodie Pl Well

	Test Code	Result	Units	Test Date	Comments	Validated By
H-1004	Temperature on arrival	4.0	Deg C	31/10/2019		Rowena Houghton KTP
H-M0414	Total Coliforms	> 200.5	MPN/100mL	31/10/2019	DWSNZ test	Rowena Houghton KTP
H-M0415	E. coli	5.3	MPN/100mL	31/10/2019	Fails MAV Limit of 0	Rowena Houghton KTP
HS-0002	Suspended Solids - Total	< 5 **	g/m³			Eurofins Wg Import
HS-0040	Total (NP) Organic Carbon	0.9 **	g/m³			Eurofins Wg Import
HS-0052	Alkalinity - Total	281 **	g CaCO3/m³			Eurofins Wg Import
HS-0055	Conductivity at 25°C	83.5 **	mS/m			Eurofins Wg Import
HS-0602	Chloride	76.3 **	g/m³			Eurofins Wg Import
HS-0604	Bromide	0.26 **	g/m³			Eurofins Wg Import
HS-0605	Nitrate - Nitrogen	0.78 **	g/m³			Eurofins Wg Import
HS-0607	Sulphate	16.1 **	g/m³			Eurofins Wg Import
HS-0701	Fluoride	0.107 **	g/m³			Eurofins Wg Import
HS-0755B	Filtered Absorbance at 254 nm	0.01 **				Eurofins Wg Import
HS-1769	Iron - Total	0.014 **	g/m³			Eurofins Wg Import
HS-6043	Total Hardness	316 **	g CaCO3/m³			Eurofins Wg Import
HS-6603	Arsenic - Total	< 0.002 **	g/m³			Eurofins Wg Import
HS-6607	Boron - Total	0.05 **	g/m³			Eurofins Wg Import
HS-6608	Cadmium - Total	< 0.001 **	g/m³			Eurofins Wg Import
HS-6610	Calcium - Total	113 **	g/m³			Eurofins Wg Import
HS-6618	Lead - Total	< 0.001 **	g/m³			Eurofins Wg Import
HS-6620	Magnesium - Total	7.9 **	g/m³			Eurofins Wg Import
HS-6621	Manganese - Total	< 0.001 **	g/m³			Eurofins Wg Import
HS-6626	Potassium - Total	1.80 **	g/m³			Eurofins Wg Import
HS-6631	Sodium - Total	59.7 **	g/m³			Eurofins Wg Import
P1855B	Aqueous Total Metal Digestion	Completed **				Eurofins Wg Import

Comments:

** See attached Subcontracting Laboratory document

Sampled by customer using WTHB approved containers.

All samples analysed as we receive them. Delivery was within the correct time and/or temperature condition

Comments on Individual Test Results

Total Coliforms

Coliforms are a broad class of bacteria found in our environment, not all of which present a risk to public health. Total coliforms include bacteria that are found

1105 Plunket Street St Leonards
Hastings 4120 New Zealand
Phone: (06) 870 6449 Fax:
Email: info@watertestinghb.nz Website: http://www.watertestinghb.co.nz

in the soil, in water that has been influenced by surface water, and in human or animal waste. The DWSNZ does not include a Maximum Value for total coliforms and a high total coliform reading does not necessarily pose a risk to human health. However, total coliforms are a useful indicator of drinking-water quality and may detect abnormalities and changes in quality over time.

E. coli

In the DWSNZ E. coli is used as an indicator organism for contamination of drinking water by faecal material. It is impractical to monitor water supplies for all potential human pathogens. Additionally, to be considered safe to drink the DWSNZ determine that water must not exceed Maximum Acceptable Values (MAV) for a range of chemicals. The standards also give Guideline Values (GV) for other chemicals, which if exceeded may impact on the taste, odour and colour of the water, but have no direct impact on the water safety.

Test Methodology:

Test	Methodology	Detection Limit
Total Coliforms	APHA 23rd Edition Method 9223B by Colilert Quantitray	1 MPN/100mL
E. coli	APHA 23rd Edition Method 9223B by Colilert Quantitray	1 MPN/100mL
Suspended Solids - Total	APHA 23rd Edition Online Method 2540 D	3 g/m³
Total (NP) Organic Carbon	Total Non-Purgeable Organic Carbon using TOC analyser. APHA 23rd Edition Online 5310B,C, ASTM D2579, D4839.	0.1 g/m³
Alkalinity - Total	APHA 23rd Edition Online Method 2320 B	1 g CaCO3/m³
Conductivity at 25°C	APHA 23rd Edition Online Method 2510 B.	0.1 mS/m
Chloride	Ion Chromatography following USEPA 300.0 (modified).	0.02 g/m³
Bromide	Ion Chromatography following USEPA 300.0 (modified)	0.02 g/m³
Nitrate - Nitrogen	Ion Chromatography following USEPA 300.0 (modified).	0.01 g/m³
Sulphate	Ion Chromatography following USEPA 300.0 (modified).	0.02 g/m³
Fluoride	Ion Chromatography following USEPA 300.0 (modified)	0.005 g/m³
Filtered Absorbance at 254 nm	In house method. Absorbance measured after filtration through 0.45micron	0.01
Iron - Total	ICP-OES following APHA 23rd Edition Online Method 3120 B (modified)	0.013 g/m³
Total Hardness	ICP-MS following APHA 23rd Edition Online method 3125 (modified).	1 g CaCO3/m³
Arsenic - Total	ICP-MS following APHA 23rd Edition Online method 3125 (modified)	0.002 g/m³
Boron - Total	ICP-MS following APHA 23rd Edition Online method 3125 (modified)	0.05 g/m³
Cadmium - Total	ICP-MS following APHA 23rd Edition Online method 3125 (modified)	0.001 g/m³
Calcium - Total	ICP-MS following APHA 23rd Edition Online method 3125 (modified)	0.1 g/m³
Lead - Total	ICP-MS following APHA 23rd Edition Online method 3125 (modified)	0.001 g/m³
Magnesium - Total	ICP-MS following APHA 23rd Edition Online method 3125 (modified)	0.1 g/m³
Manganese - Total	ICP-MS following APHA 23rd Edition Online method 3125 (modified)	0.001 g/m³
Potassium - Total	ICP-MS following APHA 23rd Edition Online method 3125 (modified)	0.1 g/m³
Sodium - Total	ICP-MS following APHA 23rd Edition Online method 3125 (modified)	0.1 g/m³
Aqueous Total Metal Digestion	Follows APHA 22nd Edition Method 3030E (modified) using nitric acid.	n/a

Onsite Observation Methodology:

Test	Methodology	Detection Limit
Temperature on arrival	Dedicated Thermometer following APHA 23rd Edition Method 2550 B	0.1 Deg C

"<" means that no analyte was found in the sample at the level of detection shown. Detection limits are based on a clean matrix and may vary according to individual sample.

g/m3 is the equivalent to mg/L and ppm.

Samples will be retained for a period of time, in suitable conditions appropriate to the analyses requested.

All test methods and confidence limits are available on request. This report must not be reproduced except in full, without the written consent of the laboratory.

Report Released By

Rowena Houghton

1105 Plunket Street St Leonards
Hastings 4120 New Zealand
Phone: (06) 870 6449 Fax:
Email: info@watertestinghb.nz Website: http://www.watertestinghb.co.nz

1105 Plunket Street St Leonards

Hastings 4120 New Zealand

Phone: (06) 870 6449 Fax:

Email: info@watertestinghb.nz Website: http://www.watertestinghb.co.nz

wsp.com/nz